2005 800 SX-R

PARTS DIAGRAM

Carburetor Parts

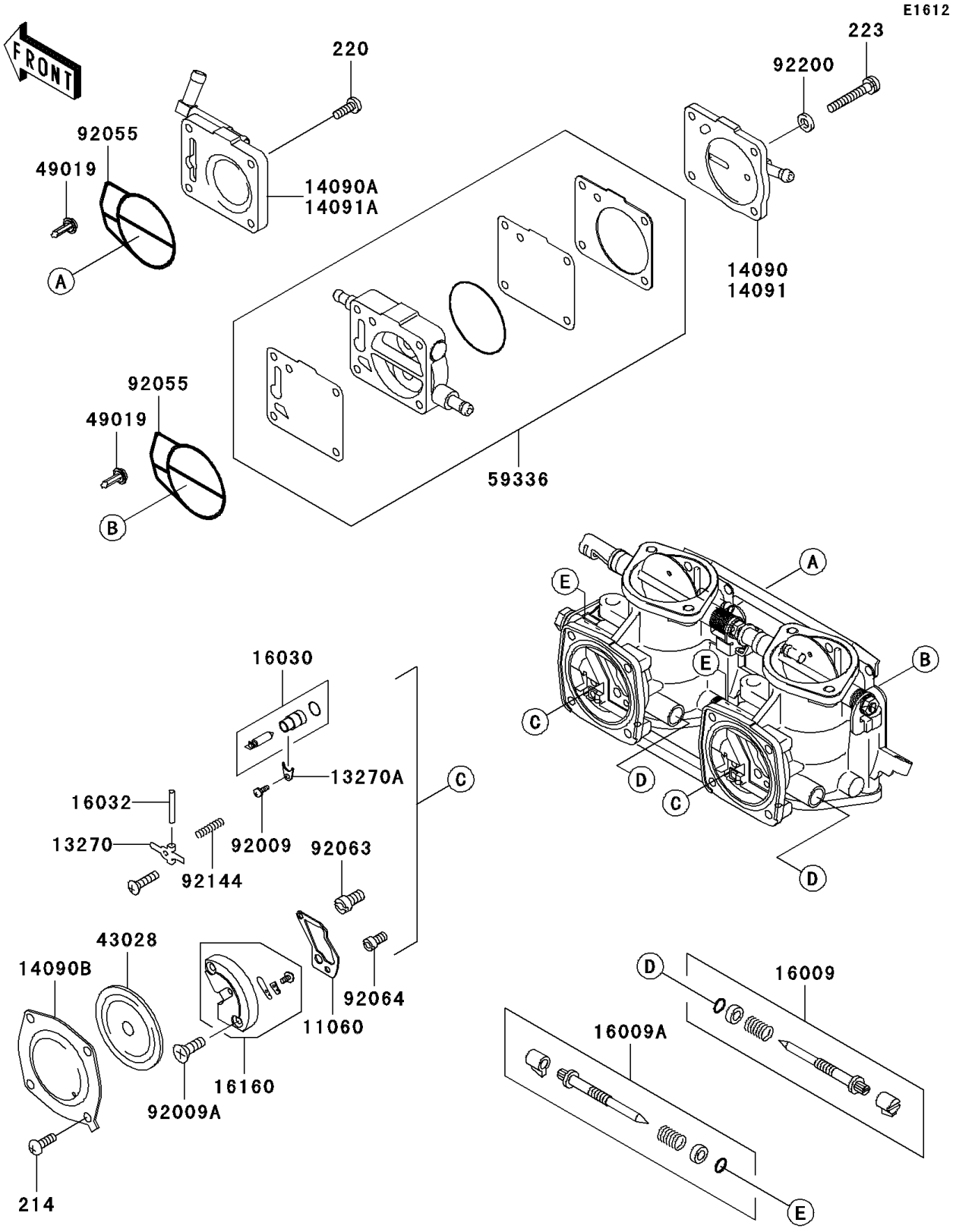

© 2026 Kawasaki Motors Corp., U.S.A.

2005 800 SX-R

PARTS LIST

Carburetor Parts

ITEM NAME	PART NUMBER	QUANTITY
SCREW-PAN+- (Ref # 214)	214R0510	8
SCREW-PAN-CROS (Ref # 220)	220R0516	4
SCREW-PAN-WS-CROS (Ref # 223)	223R0535	4
GASKET (Ref # 11060)	11060-3774	2
PLATE (Ref # 13270)	13270-3828	2
PLATE (Ref # 13270A)	13270-3829	2
COVER (Ref # 14090B)	14090-3785	2
COVER (Ref # 14091)	14091-3774	1
COVER (Ref # 14091A)	14091-3775	1
NEEDLE-JET,SLOW (Ref # 16009)	16009-3717	2
NEEDLE-JET,MAIN (Ref # 16009A)	16009-3718	2
VALVE-FLOAT (Ref # 16030)	16030-3703	2
PIN,FLOAT (Ref # 16032)	16032-006	2
BODY (Ref # 16160)	16160-3737	2
DIAPHRAGM (Ref # 43028)	43028-3709	2
FILTER-FUEL (Ref # 49019)	49019-3713	2
CASE-PUMP,DIAPHRAGM (Ref # 59336)	59336-3712	1
SCREW,3X7 (Ref # 92009)	92009-3821	2
SCREW,4X14 (Ref # 92009A)	92009-3822	4
RING-O (Ref # 92055)	92055-3745	2
JET-MAIN,#132.5 (Ref # 92063)	92063-3724	2
JET-PILOT,#72.5 (Ref # 92064)	92064-3704	2
SPRING (Ref # 92144)	92144-3756	2
WASHER,5.3X10X1.0 (Ref # 92200)	92200-3745	4

© 2026 Kawasaki Motors Corp., U.S.A.