1975 Mach IV

PARTS DIAGRAM

SWING ARM/SHOCK ABSORBERS (H2-B/C)

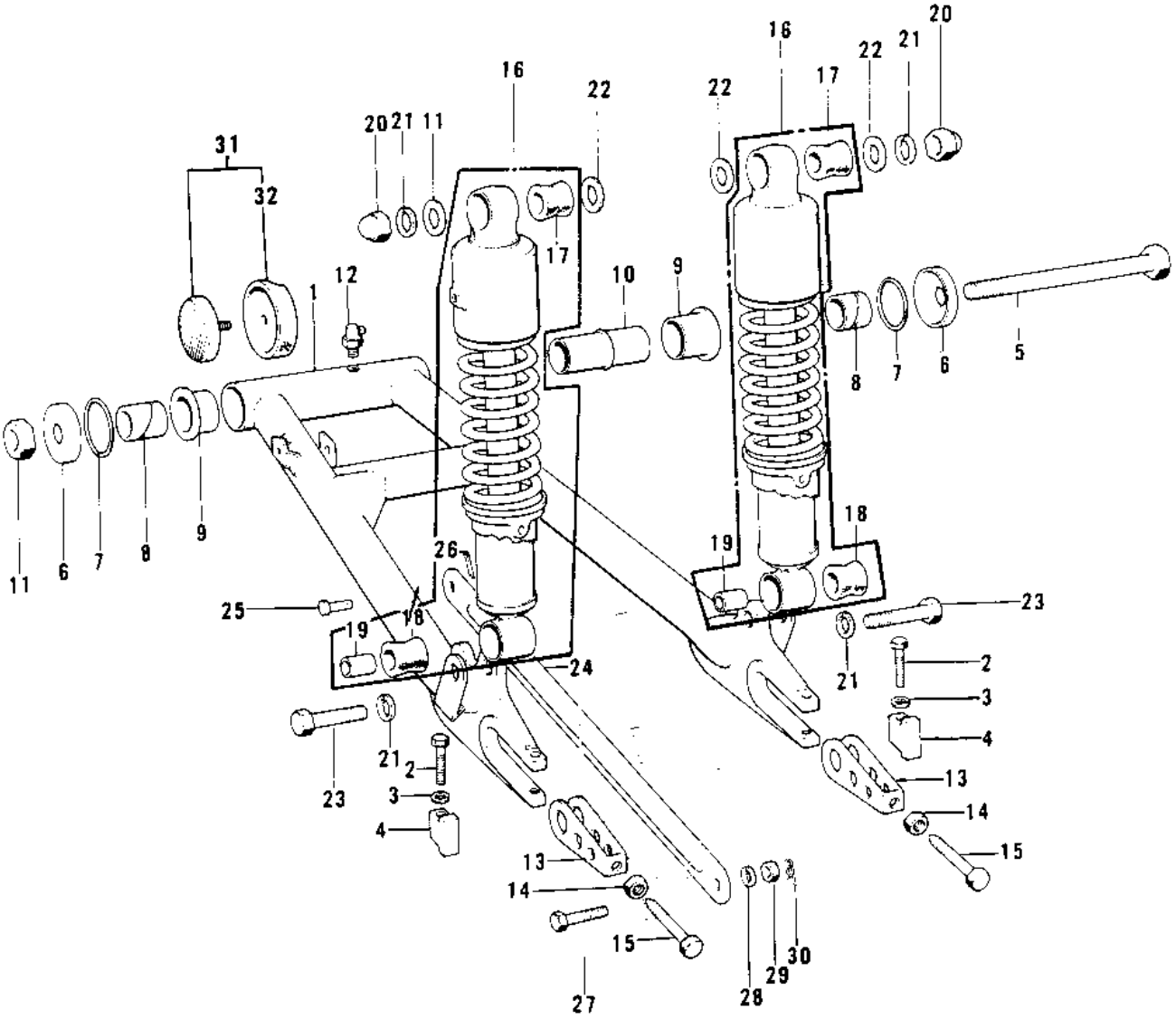

© 2026 Kawasaki Motors Corp., U.S.A.

1975 Mach IV

PARTS LIST

SWING ARM/SHOCK ABSORBERS (H2-B/C)

Kawasaki
Let the Good Times Roll®

ITEM NAME	PART NUMBER	QUANTITY
SWINGING ARM (Ref # 1)	33001-059	
BOLT (Ref # 2)	92001-1578	
WASHER SPRING 8MM (Ref # 3)	461F0800	
STOPPER,CHAIN ADJUST (Ref # 4)	33044-001	
SHAFT-SWING ARM PIVOT (Ref # 5)	33032-038	
CAP,SWING ARM (Ref # 6)	33035-007	
"0" RING,30MM (Ref # 7)	671B2530	
SLEEVE SWING ARM (Ref # 8)	33034-009	
BUSHING-SWING ARM (Ref # 9)	33033-009	
SLEEVE SWING ARM LONG (Ref # 10)	33034-008	
NUT-SELF LOCKING (Ref # 11)	92019-012	
GREASE NIPPLE (Ref # 12)	92005-002	
ADJUSTER,CHAIN D=10MM (Ref # 13)	33040-063	
NUT 10MM (Ref # 14)	315B1000	
BOLT-CHN ADJUST 10MM (Ref # 15)	92001-143	
SHOCK ABSBR RR (Ref # 16)	45014-096	
BUSHING,SHCK ABS RUB (Ref # 17)	45017-015	
BUSHING, SHCK ABS RUB (Ref # 18)	45017-012	
BUSHING,SHOCK ABSORB (Ref # 19)	45016-008	
NUT SHOCK ABSORBER (Ref # 20)	92020-003	
WASHER SPRING 10MM (Ref # 21)	461F1000	
WASHER,PLAIN,10MM (Ref # 22)	92022-246	
BOLT HEX HEAD 10X35 (Ref # 23)	113N1035	
TORQUE LINK-REAR BRK (Ref # 24)	43007-033	
PIN REAR TORQUE LINK (Ref # 25)	43009-001	
PIN COTTER 3.0X25 (Ref # 26)	550D3025	
BOLT-HEX HEAD,10X40 (Ref # 27)	92003-097	
WASHER SPRING 10MM (Ref # 28)	461F1000	
NUT 10MM (Ref # 29)	315B1000	

© 2026 Kawasaki Motors Corp., U.S.A.

1975 Mach IV

PARTS LIST

SWING ARM/SHOCK ABSORBERS (H2-B/C)

ITEM NAME	PART NUMBER	QUANTITY
PIN,SNAP (Ref # 30)	554A0800	
REFLECTOR,REFLEX,REAR (Ref # 31)	28001-030	
DAMPER RUBBER-REFLEX (Ref # 32)	28016-002	

© 2026 Kawasaki Motors Corp., U.S.A.