1975 Mach IV

PARTS DIAGRAM

AIR CLEANER

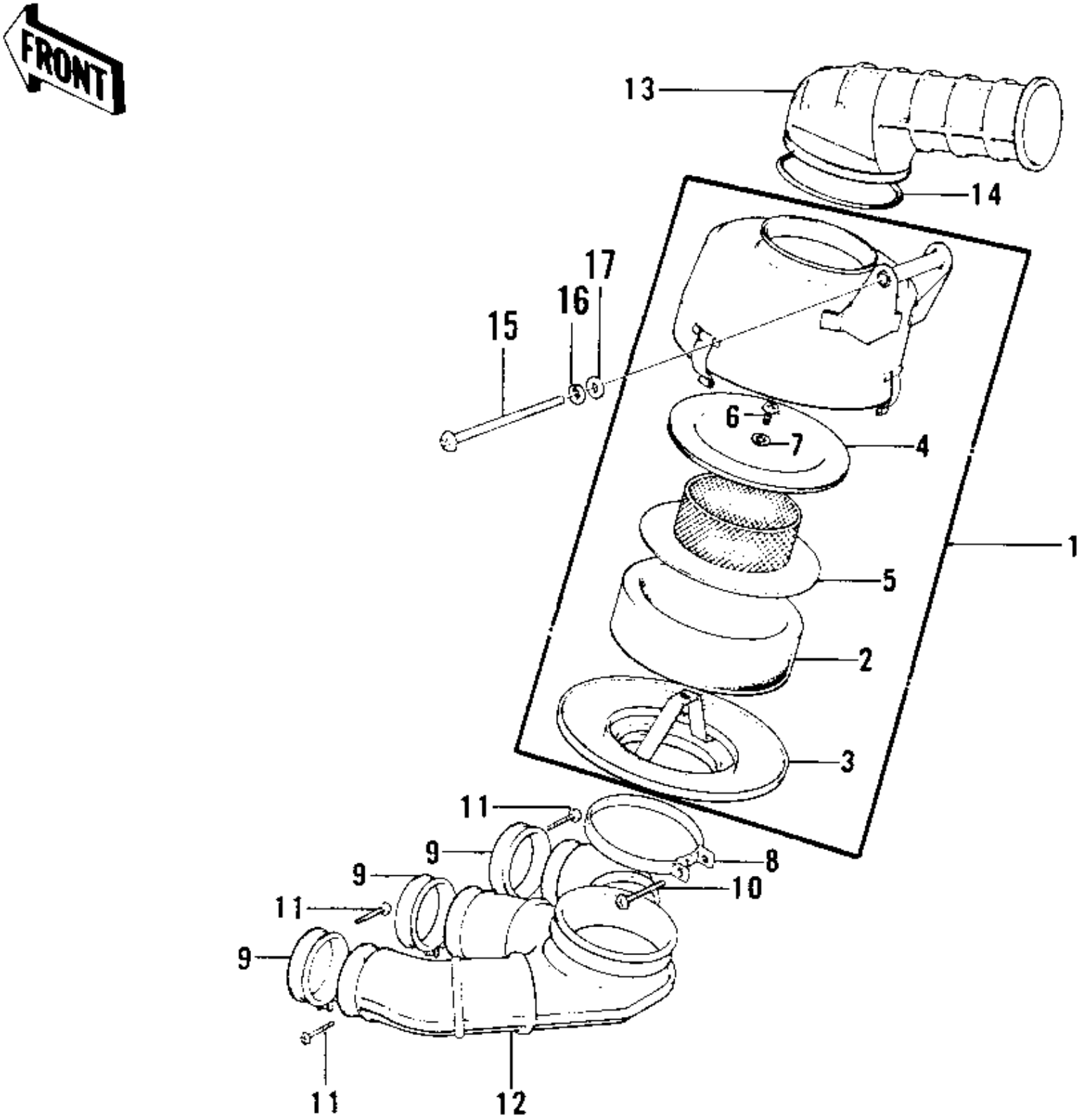

© 2026 Kawasaki Motors Corp., U.S.A.

1975 Mach IV

PARTS LIST

AIR CLEANER

Kawasaki
Let the Good Times Roll®

ITEM NAME	PART NUMBER	QUANTITY
AIR CLEANER ASSY (Ref # 1)	11010-050	
ELEMENT,AIR,CLNR (Ref # 2)	11013-033	
CAP-AIR CLEANER,LOWER (Ref # 3)	11012-024	
CAP-AIR CLEANER,UPPER (Ref # 4)	11012-025	
WIRE NET-AIR CLEANER (Ref # 5)	11014-005	
SCREW PAN HEAD 6X12 (Ref # 6)	220B0612	
WASHER SPRING 6MM (Ref # 7)	461F0600	
CLAMP-AIR CLEANER (Ref # 8)	92037-060	
CLAMP-INLET PIPE (Ref # 9)	92037-061	
SCREW PAN HEAD 6X35 (Ref # 10)	220B0635	
SCREW-PAN-CROS (Ref # 11)	220B0535	
INLET PIPE (Ref # 12)	11015-032	
SILENCER (Ref # 13)	11016-005	
SPRING-COIL (Ref # 14)	92081-102	
SCREW PAN HEAD 6X110 (Ref # 15)	220B06110	
WASHER SPRING 6MM (Ref # 16)	461F0600	
WASHER PLAIN 6MM (Ref # 17)	411B0600	

© 2026 Kawasaki Motors Corp., U.S.A.