2005 800 SX-R

PARTS DIAGRAM

Muffler(s)

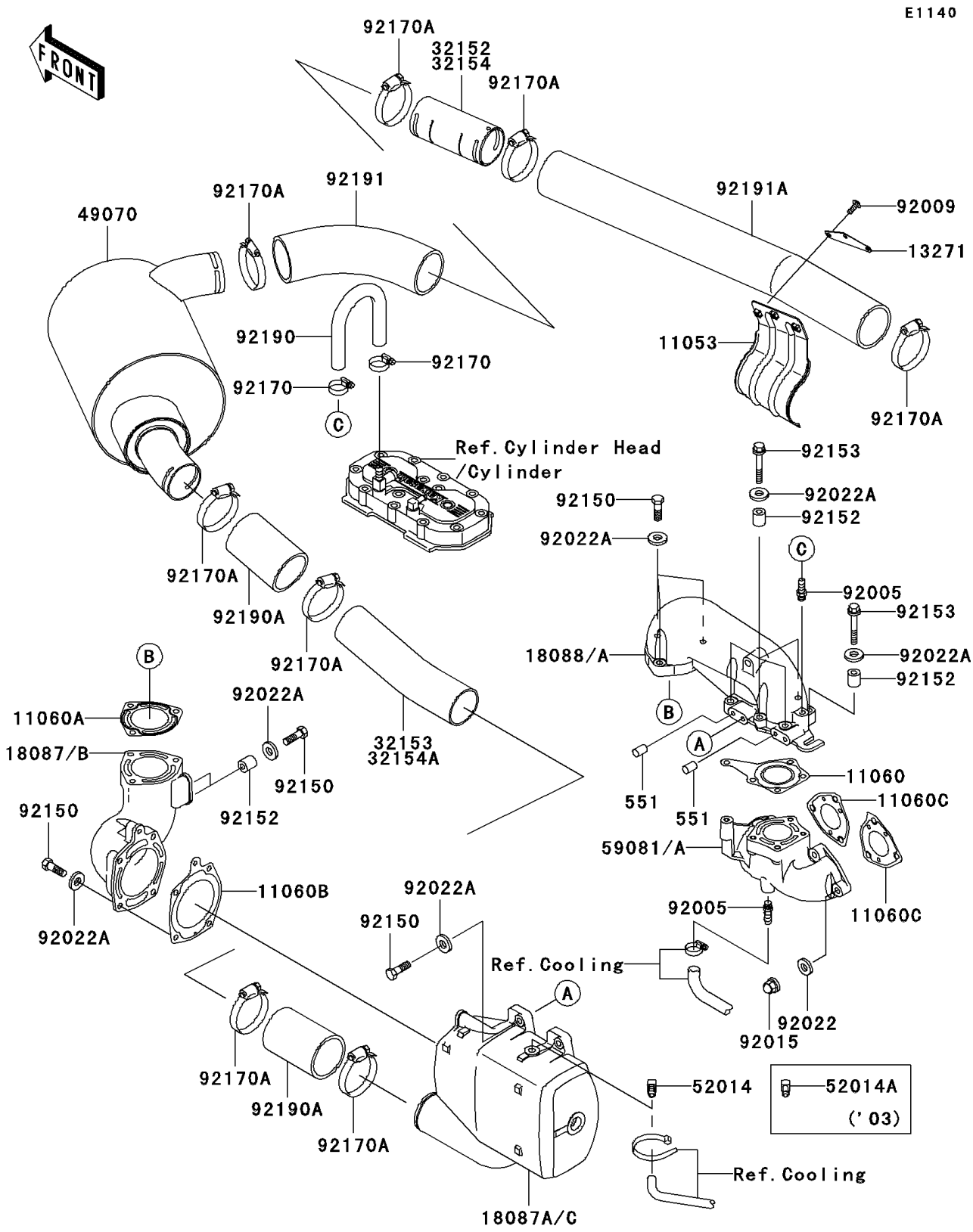

© 2026 Kawasaki Motors Corp., U.S.A.

2005 800 SX-R

PARTS LIST

Muffler(s)

ITEM NAME	PART NUMBER	QUANTITY
PIN-DOWEL (Ref # 551)	551R0812	2
BRACKET (Ref # 11053)	11053-3728	1
GASKET,EXHAUST (Ref # 11060)	11060-3712	1
GASKET,MUFFLER,FR (Ref # 11060A)	11060-3713	1
GASKET,MUFFLER CHAMBER (Ref # 11060B)	11060-3714	1
GASKET,EXHAUST MANIFOLD (Ref # 11060C)	11060-3759	2
PLATE (Ref # 13271)	13271-3872	1
MUFFLER,FR (Ref # 18087B)	18087-3705	1
MUFFLER,RR (Ref # 18087C)	18087-3706	1
PIPE-EXHAUST (Ref # 18088A)	18088-3722	1
PIPE (Ref # 32154)	32154-3709	1
PIPE (Ref # 32154A)	32154-3710	1
MUFFLER-COMP (Ref # 49070)	49070-3743	1
ELBOW (Ref # 52014)	52014-3708	1
MANIFOLD-EXHAUST (Ref # 59081A)	59081-3742	1
FITTING,HOSE (Ref # 92005)	92005-3712	2
SCREW,M6X20 (Ref # 92009)	92009-3870	3
NUT,CAP,8MM (Ref # 92015)	92015-1371	6
WASHER,8.2X18X1.5 (Ref # 92022)	92022-1964	6
WASHER,8.2X18X1.5 (Ref # 92022A)	92022-3743	16
BOLT,8X35 (Ref # 92150)	92150-3833	11
COLLAR (Ref # 92152)	92152-3736	7
BOLT (Ref # 92153)	92153-1276	5
CLAMP (Ref # 92170)	92170-3718	2
CLAMP (Ref # 92170A)	92170-3754	8
TUBE,HEAD-EXHAUST PIPE (Ref # 92190)	92190-3829	1
TUBE,CHAMBER-MUFLLER (Ref # 92190A)	92190-3950	2
TUBE,WATER MUFFLER-PIPE (Ref # 92191)	92191-3953	1
TUBE,PIPE-TAILPIPE (Ref # 92191A)	92191-3954	1

© 2026 Kawasaki Motors Corp., U.S.A.