# 2005 800 SX-R

## PARTS DIAGRAM

### Cylinder Head/Cylinder

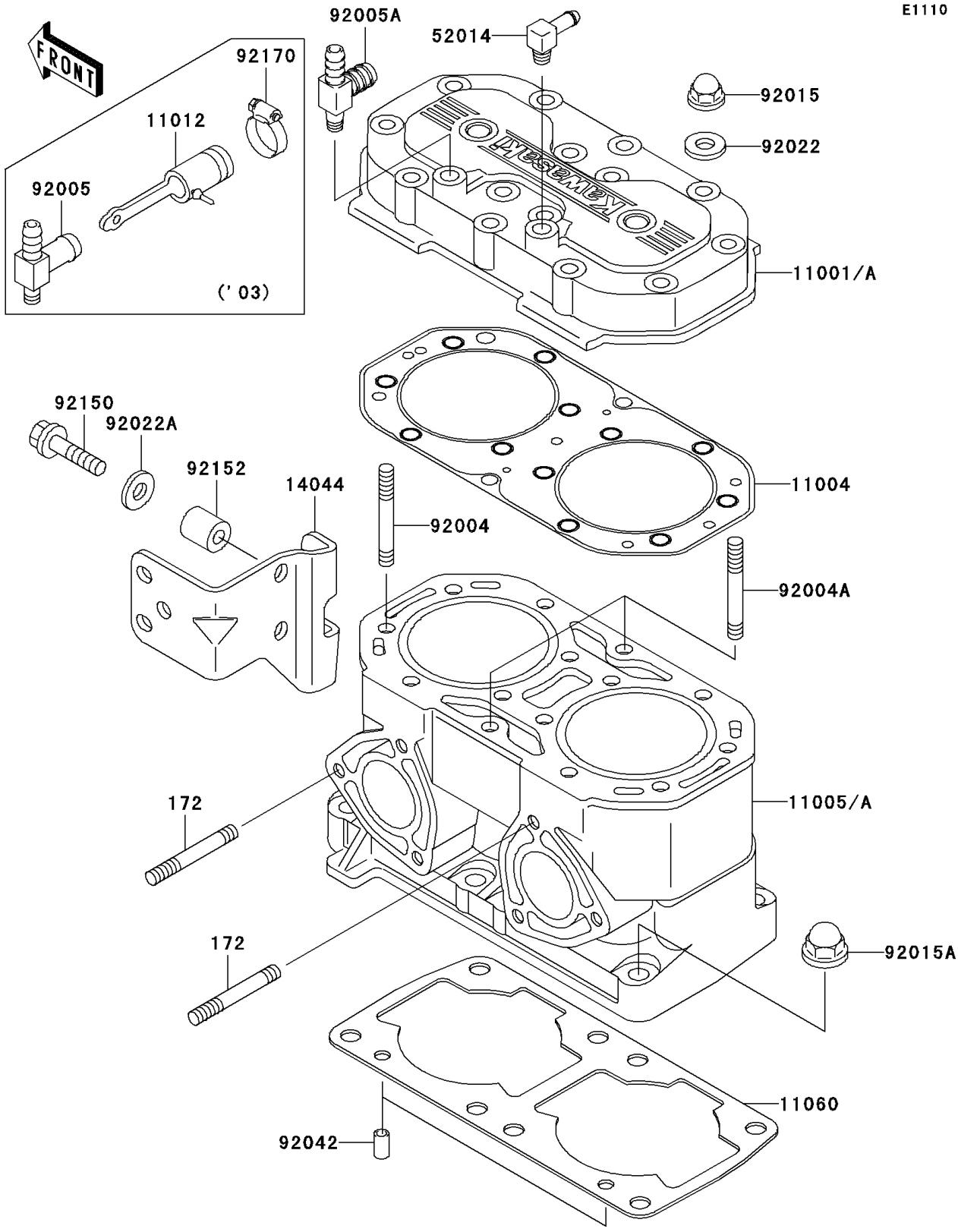


© 2026 Kawasaki Motors Corp., U.S.A.

# 2005 800 SX-R

## PARTS LIST

### Cylinder Head/Cylinder

| ITEM NAME | PART NUMBER | QUANTITY |
|---|---|---|
| BOLT-STUD (Ref # 172) | 172R0830 | 6 |
| HEAD-CYLINDER (Ref # 11001A) | 11001-3746 | 1 |
| GASKET-HEAD (Ref # 11004) | 11004-3720 | 1 |
| CYLINDER-ENGINE (Ref # 11005A) | 11005-3760 | 1 |
| GASKET,CYLINDER BASE (Ref # 11060) | 11060-3711 | 1 |
| HOLDER-CABLE (Ref # 14044) | 14044-3728 | 1 |
| ELBOW (Ref # 52014) | 52014-3721 | 1 |
| STUD,8X43 (Ref # 92004) | 92004-3715 | 12 |
| STUD,8X43 (Ref # 92004A) | 92004-3719 | 2 |
| FITTING (Ref # 92005A) | 92005-3749 | 1 |
| NUT,CAP,8MM (Ref # 92015) | 92015-1371 | 14 |
| NUT,10MM (Ref # 92015A) | 92015-1649 | 8 |
| WASHER,8.2X18X1.5 (Ref # 92022) | 92022-1964 | 14 |
| WASHER,8.2X18X1.5 (Ref # 92022A) | 92022-3743 | 2 |
| PIN,DOWEL,6.3X8X14 (Ref # 92042) | 92042-007 | 2 |
| BOLT,8X35 (Ref # 92150) | 92150-3833 | 2 |
| COLLAR (Ref # 92152) | 92152-3736 | 2 |

© 2026 Kawasaki Motors Corp., U.S.A.