1968 Commander

PARTS DIAGRAM

FRONT HUB/BRAKE (E/NO.54590-)

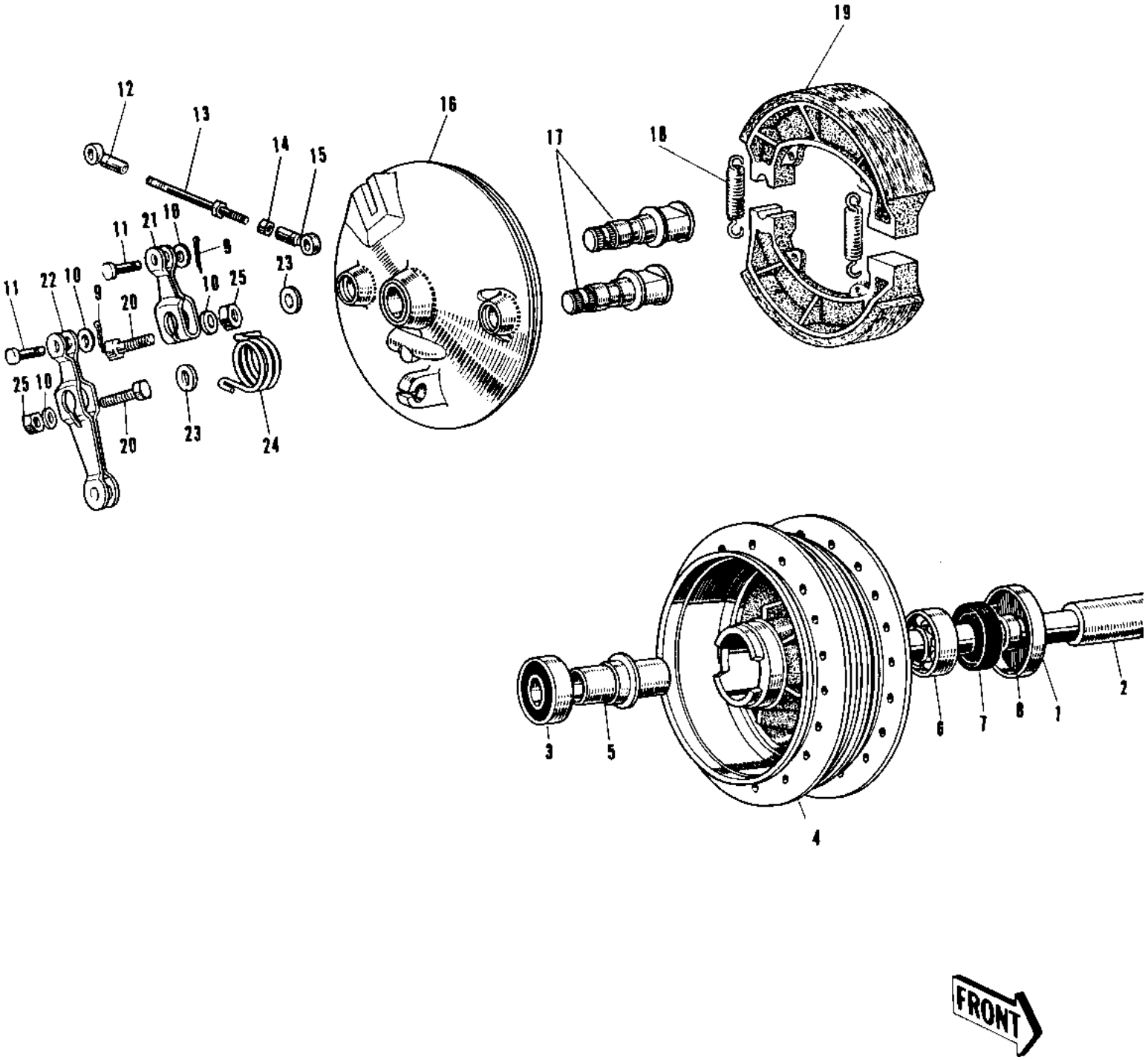

© 2026 Kawasaki Motors Corp., U.S.A.

1968 Commander

PARTS LIST

FRONT HUB/BRAKE (E/NO.54590-)

ITEM NAME	PART NUMBER	QUANTITY
DUST SHIELD FRONT HUB (Ref # 1)	41042-005	1
AXLE FRONT (Ref # 2)	41068-020	1
DRUM-ASSY,FR BRK (Ref # 3~7)	41034-013	1
BEARING BALL #6303Z (Ref # 3)	601B6303Z	1
SPACER FR HUB BEARING (Ref # 5)	41039-015	1
BEARING BALL #6303 (Ref # 6)	601B6303	1
OIL SEAL FRONT AXLE (Ref # 7)	654A254708	1
COLLAR AXLE OIL SEAL (Ref # 8)	41069-009	1
UNAVAILABLE IN PRICE BOOK (Ref # 9~25)	41035-022	1
PIN COTTER 1.2X10 (Ref # 9)	550D1210	2
WASHER PLAIN 6MM (Ref # 10)	411B0600	4
PIN BRAKE CONNECT ROD (Ref # 11)	41055-003	2
ROD END BRK CONNECT B (Ref # 12)	41058-003	1
ROD END,BRK CONNECT (Ref # 12)	41058-009	1
ROD BRK CAM LEV CONCT (Ref # 13)	41057-003	1
ROD BRK CAM LEV CONCT (Ref # 13)	41057-011	1
NUT,5MM (Ref # 14)	311B0500	1
NUT,5MM (Ref # 14)	311B0500	1
ROD END BRK CONNECT A (Ref # 15)	41058-002	1
ROD END,BRK CONNECT (Ref # 15)	41058-008	1
CAM SHAFT FRONT BRAKE (Ref # 17)	41050-007	2
SPRING,BRAKE SHOE (Ref # 18)	41049-012	2
SHOE BRAKE (Ref # 19)	41048-007	2
BOLT-UPSET (Ref # 20)	112G0630	2
LEVER FRT BRK CAM 2ND (Ref # 21)	41053-012	1
LEVER FRT BRK CAM 1ST (Ref # 22)	41053-011	1
DUST SHIELD BRAKE CAM (Ref # 23)	41051-001	2
SPRING BRAKE CAM LEV (Ref # 24)	41056-003	1
NUT 6MM (Ref # 25)	311B0600	2

© 2026 Kawasaki Motors Corp., U.S.A.