1977 Custom

PARTS DIAGRAM

SEAT

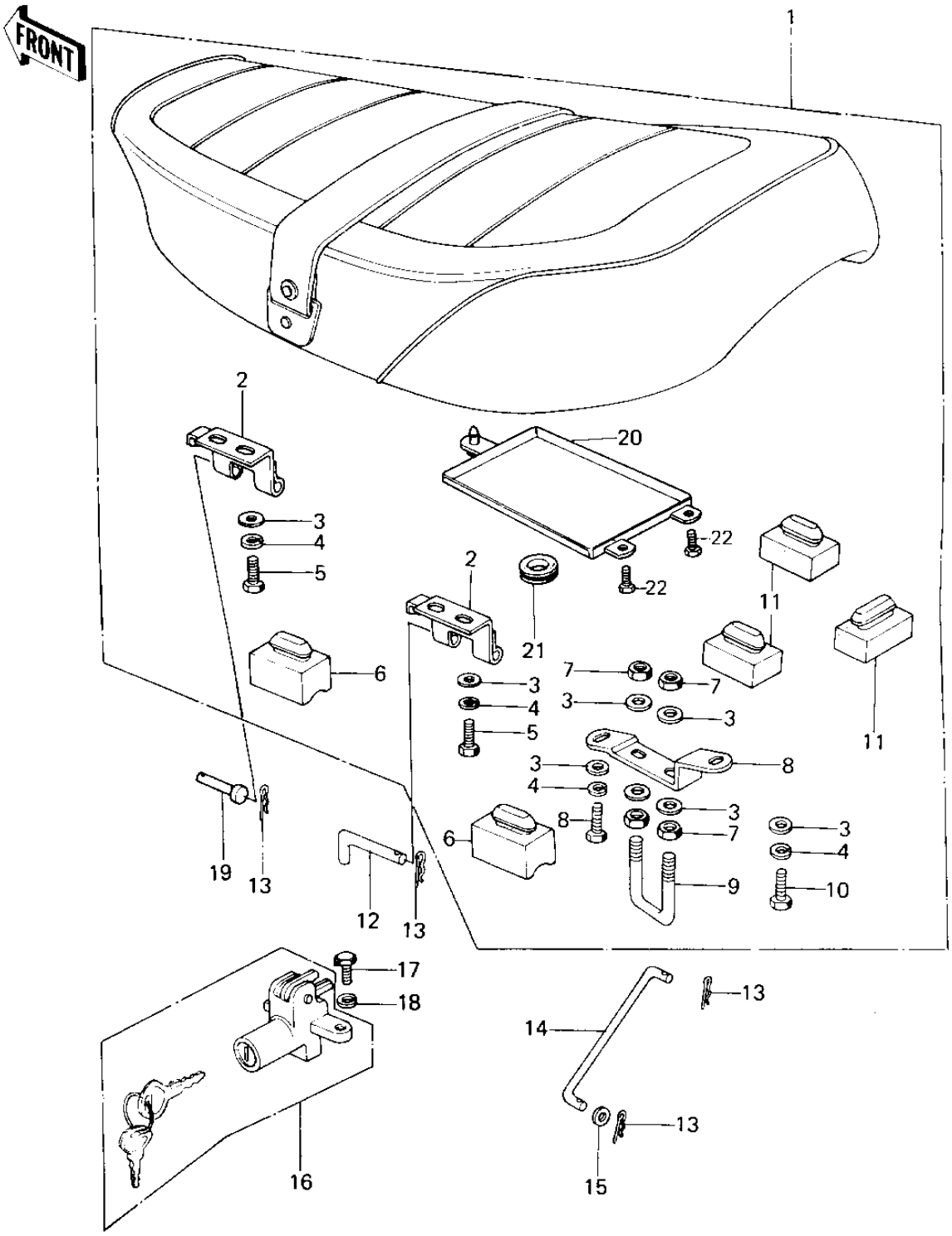

© 2026 Kawasaki Motors Corp., U.S.A.

1977 Custom

PARTS LIST

SEAT

ITEM NAME	PART NUMBER	QUANTITY
SEAT-ASSY,DUAL,W/BAN (Ref # 1)	53001-1194	1
SEAT-ASSY,DUAL,W/BAN (Ref # 1)	53001-1194	1
HINGE,FRONT (Ref # 2)	53009-031	2
WASHER PLAIN 6MM (Ref # 3)	411B0600	10
WASHER SPRING 6MM (Ref # 4)	461F0600	6
BOLT-UPSET,6X16 (Ref # 5)	112G0616	4
DAMPER RUBBER-SEAT (Ref # 6)	92075-156	2
NUT 6MM (Ref # 7)	311B0600	4
BRACKET,SEAT CATCH (Ref # 8)	53058-004	1
CATCH, SEAT (Ref # 9)	53056-002	1
BOLT-UPSET 6X14 (Ref # 10)	112B0614	2
DAMPER RUBBER (Ref # 11)	92075-099	3
PIN,DUAL SEAT PIVOT (Ref # 12)	53011-008	1
COTTER PIN (Ref # 13)	92041-003	4
STOPPER,SEAT (Ref # 14)	53054-006	1
WASHER PLAIN 6MM (Ref # 15)	410B0600	1
LOCK-ASSY,SEAT (Ref # 16)	27016-5010	1
LOCK-ASSY,SEAT (Ref # 16)	27016-5010	1
BOLT-UPSET,6X12 (Ref # 17)	112G0612	1
WASHER SPRING 6MM (Ref # 18)	461F0600	1
PIN (Ref # 19)	53011-002	1
CASE (Ref # 20)	32099-011	1
GROMMET (Ref # 21)	92071-056	1
SCREW PAN HEAD 5X10 (Ref # 22)	220B0510	2

© 2026 Kawasaki Motors Corp., U.S.A.