1979 Custom

PARTS DIAGRAM

SECONDARY SHAFT/STARTER CLUTCH

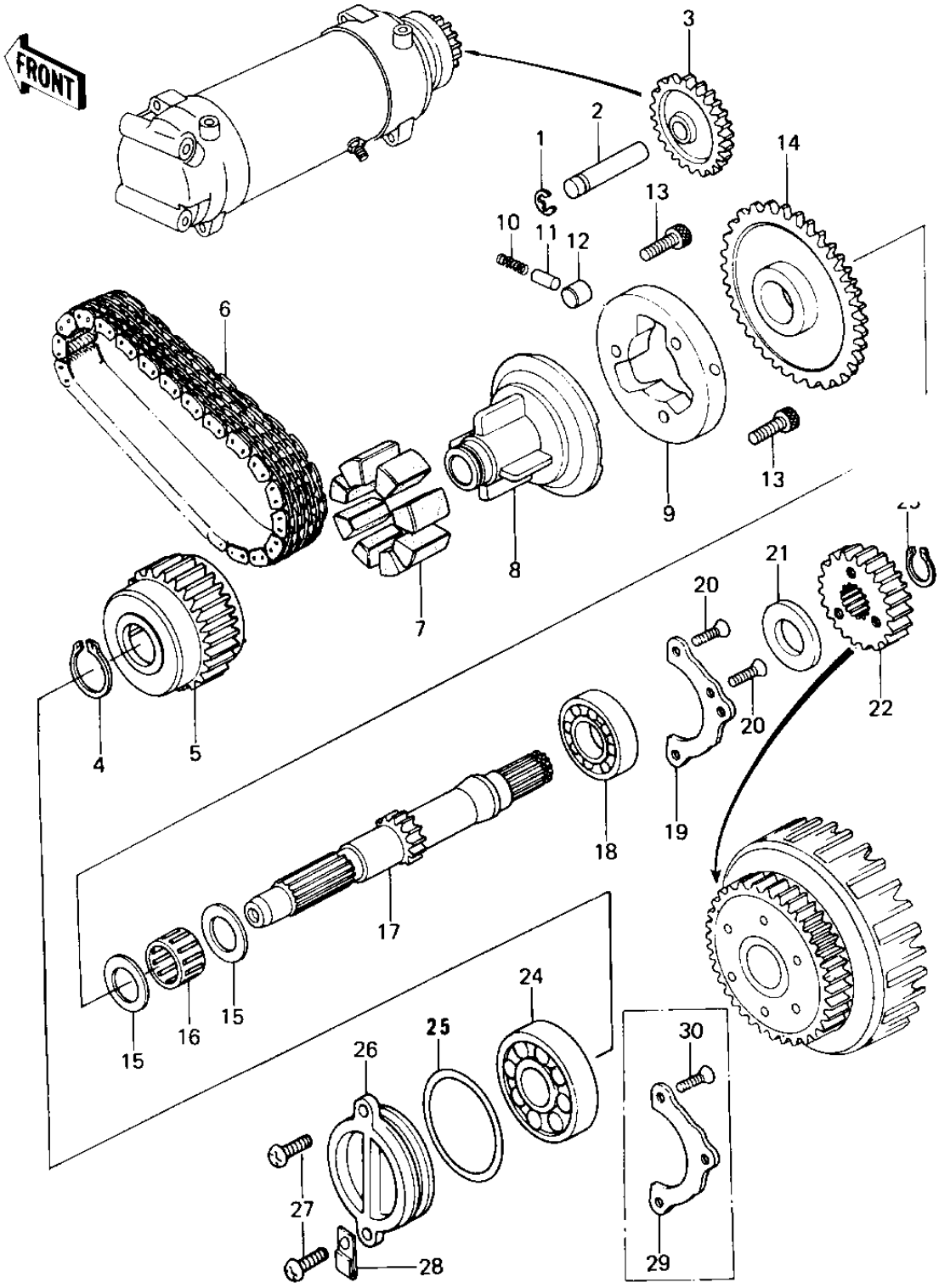

© 2026 Kawasaki Motors Corp., U.S.A.

1979 Custom

PARTS LIST

SECONDARY SHAFT/STARTER CLUTCH

ITEM NAME	PART NUMBER	QUANTITY
CIRCLIP 12MM (Ref # 1)	482K0200	1
SHAFT,IDLE GEAR (Ref # 2)	21143-003	1
GEAR,IDLE,29T (Ref # 3)	21167-004	1
CIRCLIP 28MM (Ref # 4)	480J2800	1
COUPLING,OUTER (Ref # 5)	13252-001	1
CHAIN,PRIMARY 52L (Ref # 6)	13122-007	1
DAMPER RUBBER (Ref # 7)	13098-029	8
COUPLING,INNER (Ref # 8)	13253-001	1
CLUTCH-ASSY-ONEWAY (Ref # 9)	13193-1012	1
SPRING (Ref # 10)	92081-110	3
PIN (Ref # 11)	92043-087	3
ROLLER (Ref # 12)	92122-004	3
BOLT,SOCKET,8X12 (Ref # 13)	120P0812	3
SPROCKET,STARTER,58T (Ref # 14)	12046-1032	1
SPACER,STARTER CLUTC (Ref # 15)	92026-117	2
BRG,NEEDLE,K253017 (Ref # 16)	92046-056	1
SHAFT,SECONDARY (Ref # 17)	13127-054	1
BEARING BALL #6305 (Ref # 18)	601B6305	1
PLATE,POSITIONING (Ref # 19)	14014-1007	1
SCREW CNTSNK HD 6X20 (Ref # 20)	221B0620	2
COLLAR,T=5MM (Ref # 21)	92027-263	1
GEAR,2ND SHAFT,29T (Ref # 22)	13121-037	1
CIRCLIP,22MM (Ref # 23)	480J2200	1
BEARING BALL #6304 (Ref # 24)	601B6304	1
"0" RING,46MM (Ref # 25)	670B3046	1
PLUG,SECONDARY SHAFT (Ref # 26)	92066-1019	1
SCREW PAN HEAD 6X20 (Ref # 27)	220B0620	2
CLAMP,WIRING HARNESS (Ref # 28)	21126-008	1
PLATE,POSITIONING (Ref # 29)	14014-1007	1

© 2026 Kawasaki Motors Corp., U.S.A.