1979 Custom

PARTS DIAGRAM

CYLINDER HEAD

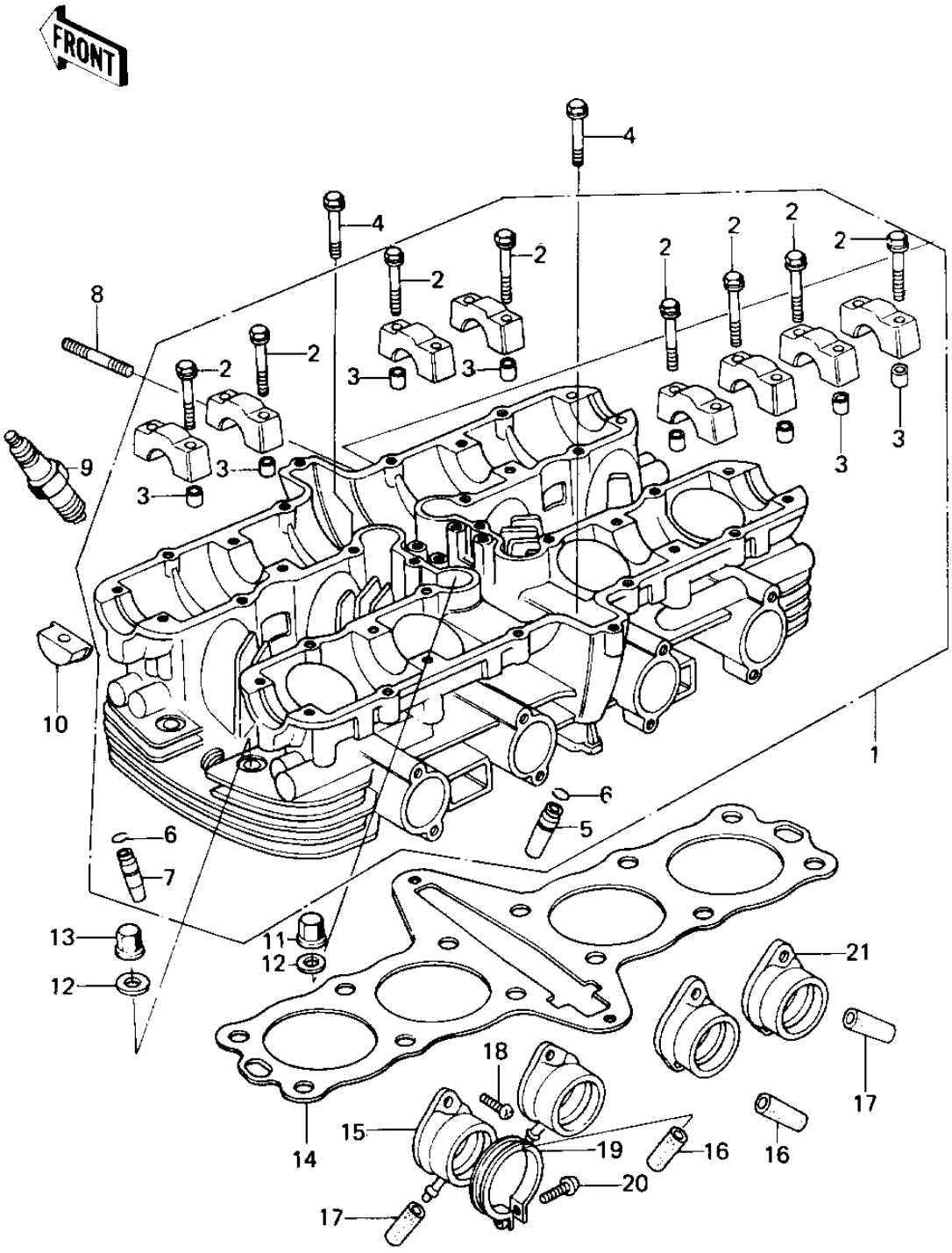

© 2026 Kawasaki Motors Corp., U.S.A.

1979 Custom

PARTS LIST

CYLINDER HEAD

Kawasaki
Let the Good Times Roll®

ITEM NAME	PART NUMBER	QUANTITY
CYLINDER HEAD,BARREL (Ref # 1)	11002-028-2H	1
HEAD ASSY,CYLINDER (Ref # 1)	11002-1014	1
BOLT,HEX HEAD,6X38 (Ref # 2)	92003-206	16
PIN-DOWEL (Ref # 3)	92042-007	16
BOLT,6X43 (Ref # 4)	92002-1881	2
GUIDE,INLET VALVE (Ref # 5)	12013-009	4
CIRCLIP-VALVE (Ref # 6)	92036-023	8
GUIDE,EXHAUST VALVE (Ref # 7)	49002-1002	4
STUD,6X27 (Ref # 8)	92004-066	8
SPARK PLUG B7ES (Ref # 9)	B7ES	4
PLUG,CAMSHAFT,11.35X (Ref # 10)	92066-1111	4
NUT,10MM (Ref # 11)	92015-1415	8
NUT,CYLINDER HEAD (Ref # 11)	92015-076	8
WASHER PLAIN 10MM (Ref # 12)	411B1000	12
NUT,CYLINDER HEAD (Ref # 13)	92015-076	4
GASKET-HEAD,CYLINDER (Ref # 14)	11004-1107	1
GASKET-HEAD,CYLINDER (Ref # 14)	11004-1107	1
DUCT,ENGINE INTAKE (Ref # 15)	16065-048	2
RUBBER PLUG (Ref # 16)	92068-006	2
RUBBER PLUG (Ref # 17)	92068-006	2
SCREW PAN HEAD 6X18 (Ref # 18)	220B0618	8
CLAMP,CARBURETOR HLD (Ref # 19)	92037-178	4
SCREW-PAN-CROS,5X25 (Ref # 20)	220B0525	4
HOLDER,CARB,R.H (Ref # 21)	16065-047	2

© 2026 Kawasaki Motors Corp., U.S.A.