1981 KX420

PARTS DIAGRAM

IGNITION

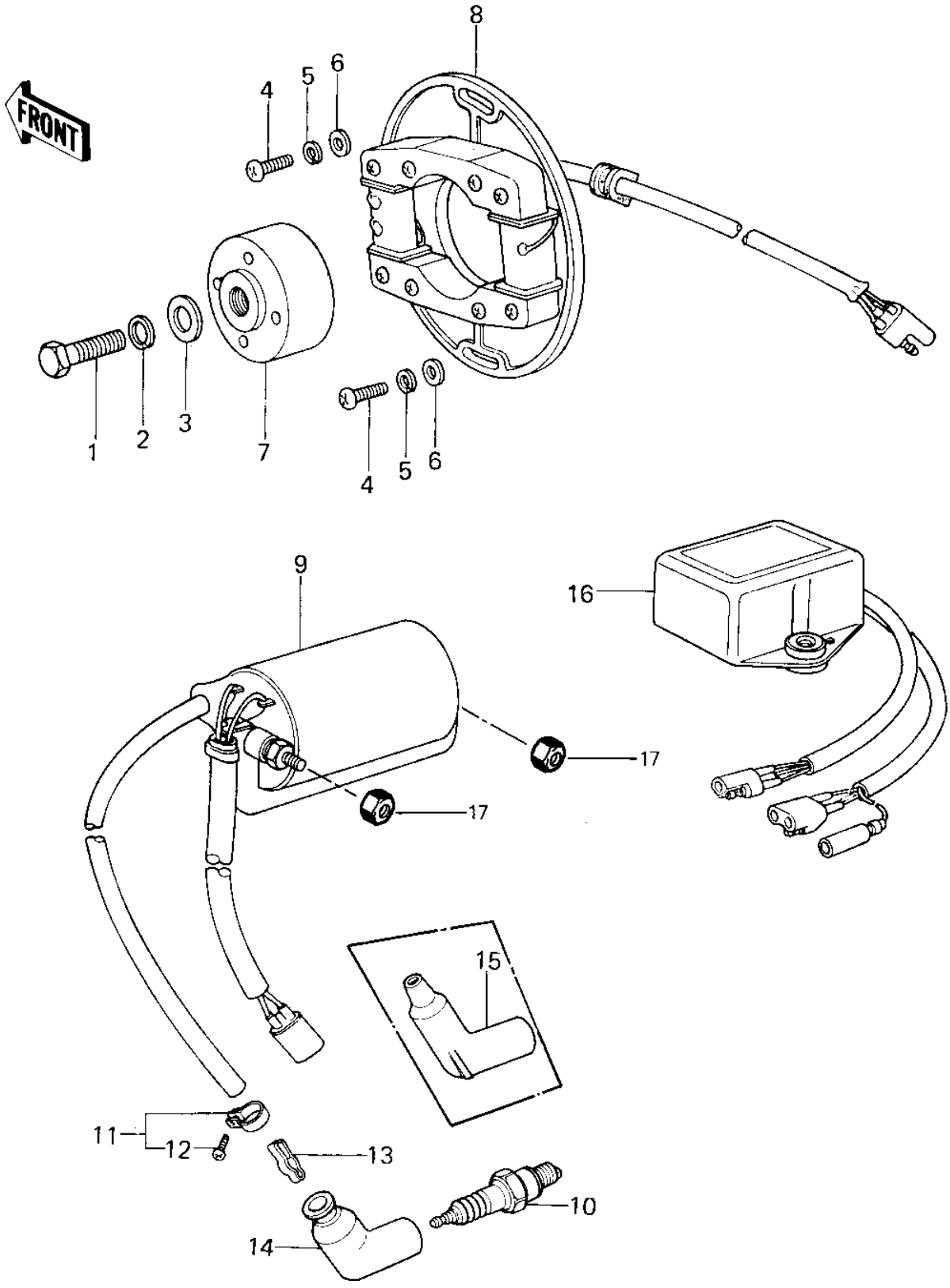

© 2026 Kawasaki Motors Corp., U.S.A.

1981 KX420

PARTS LIST

IGNITION

ITEM NAME	PART NUMBER	QUANTITY
BOLT (Ref # 1)	92001-1578	1
BOLT,8X40 (Ref # 1)	115G0840	1
WASHER SPRING 8MM (Ref # 2)	461F0800	1
WASHER,PLAIN,8MM (Ref # 3)	92022-276	1
SCREW PAN HEAD 6X25 (Ref # 4)	220B0625	1
WASHER SPRING 6MM (Ref # 5)	461F0600	1
WASHER PLAIN 6MM (Ref # 6)	410B0600	1
ROTOR,MAGNETO (Ref # 7)	21007-026	1
STATOR ASSY (Ref # 8)	21003-1010	1
COIL,IGNITION (Ref # 9)	21121-1007	1
SPARK PLUG B9EV (Ref # 10)	B9EV	1
SPARK PLUG BR9EV (Ref # 10)	92070-3002	1
CLAMP,SPARK PLUG CAP (Ref # 11)	92037-1173	1
SCREW-PAN-CROS (Ref # 12)	220B0310	1
TERMINAL,PLUG CAP (Ref # 13)	21169-001	1
CAP,SPARK PLUG (Ref # 14)	21130-1006	1
CAP ASSY,SPARK PLUG (Ref # 15)	21160-1009	1
IGNITION UNIT (Ref # 16)	21119-1001	1
NUT (Ref # 17)	92019-008	1

© 2026 Kawasaki Motors Corp., U.S.A.