1981 KX420

PARTS DIAGRAM

AIR CLEANER

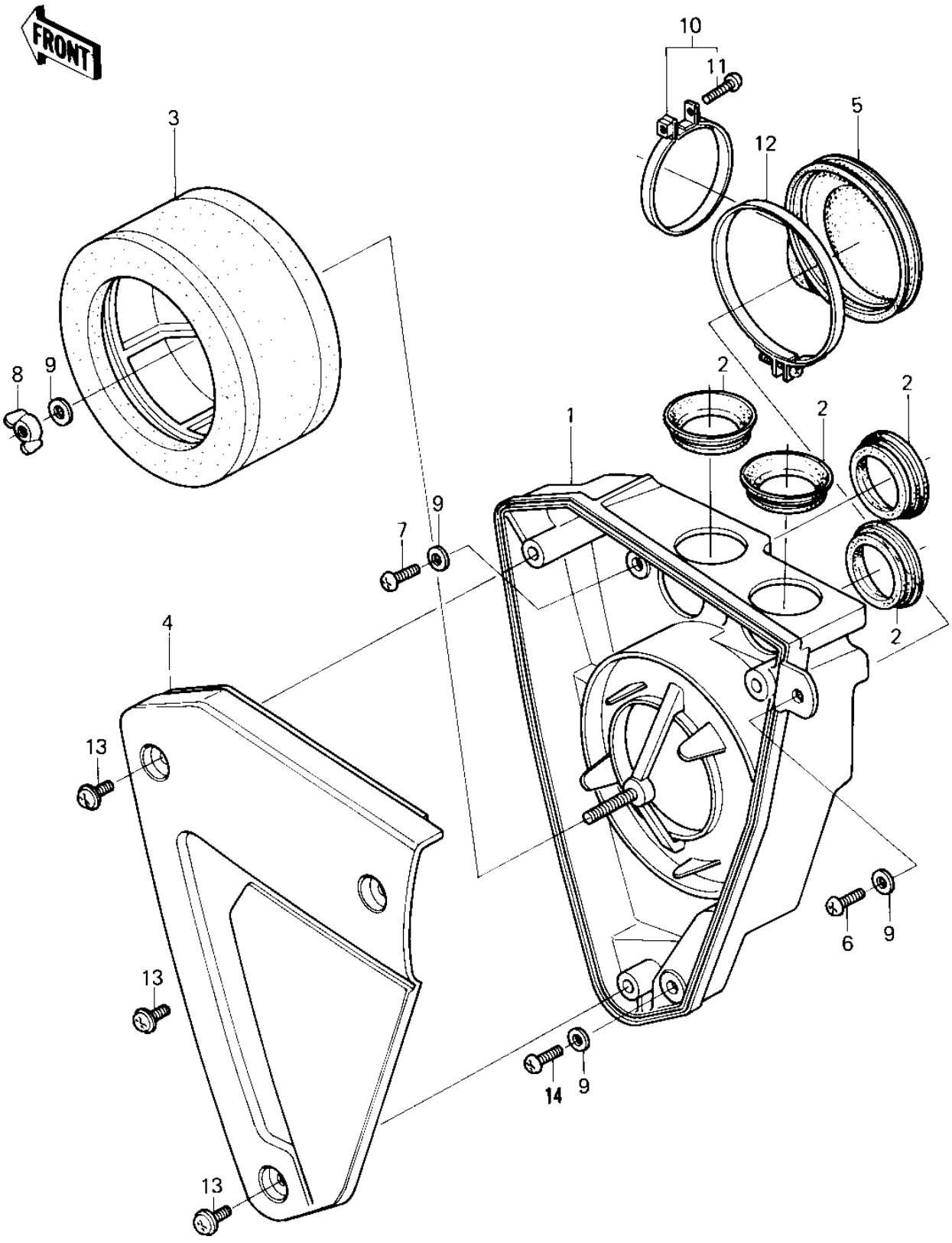

© 2026 Kawasaki Motors Corp., U.S.A.

1981 KX420

PARTS LIST

AIR CLEANER

ITEM NAME	PART NUMBER	QUANTITY
BODY,AIR CLEANER (Ref # 1)	11011-1047	1
CASE-AIR FILTER (Ref # 1)	11011-1059	1
CAP,AIR CLEANER CASE (Ref # 2)	11012-1125	1
ELEMENT,AIR CLNR (Ref # 3)	11013-1031	1
ELEMENT,AIR CLNR (Ref # 3)	11013-1036	1
COVER,AIR FILTER,F.BK (Ref # 4)	14025-1192-21	1
COVER,AIR FILTER,F.BK (Ref # 4)	14025-1192-21	1
DUCT,AIR CLEANER (Ref # 5)	14073-1038	1
SCREW PAN HEAD 6X12 (Ref # 6)	220B0612	1
SCREW PAN HEAD 6X16 (Ref # 7)	220B0616	1
SCREW PAN HEAD 6X18 (Ref # 7)	220B0618	1
NUT,AIR CLEANER CAP (Ref # 8)	92016-062	1
WASHER 6.5X20X1.6T (Ref # 9)	92022-125	1
CLAMP-AIR CLEANER (Ref # 10)	92037-068	1
SCREW PAN HEAD 6X35 (Ref # 11)	220B0635	1
CLAMP,AIR CLANER DUCT (Ref # 12)	92037-1186	1
SCREW,6X14 (Ref # 13)	92009-1287	1
SCREW PAN HEAD 6X16 (Ref # 14)	220B0616	1
SCREW PAN HEAD 6X22 (Ref # 14)	220B0622	1

© 2026 Kawasaki Motors Corp., U.S.A.