1981 KX420

PARTS DIAGRAM

GEAR CHANGE MECHANISM

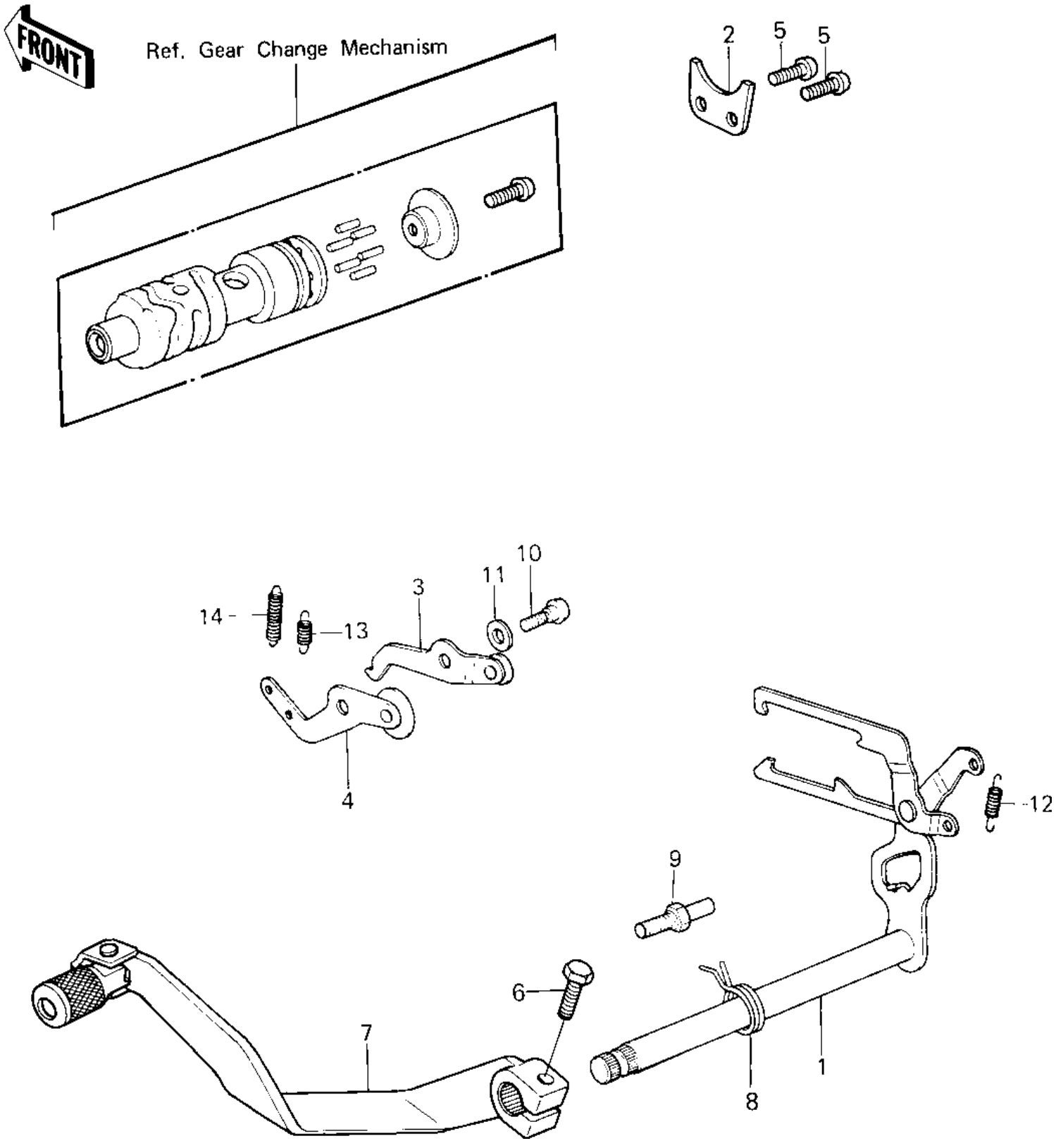

© 2026 Kawasaki Motors Corp., U.S.A.

1981 KX420

PARTS LIST

GEAR CHANGE MECHANISM

ITEM NAME	PART NUMBER	QUANTITY
LEVER ASSY,GEAR CHANG (Ref # 1)	13161-1012	
PLATE,CHANGE DRUM (Ref # 2)	13169-1267	
LEVER ASSY,GEAR CHANG (Ref # 3)	13236-007	
LEVER,GEAR SET (Ref # 4)	13236-1013	
SCREW PAN HEAD 6X14 (Ref # 5)	220B0614	
BOLT-UPSET,6X20 (Ref # 6)	112G0620	
PEDAL ASSY,GEAR CHANG (Ref # 7)	13242-1025	
SPRING,CHG PEDL RTRN (Ref # 8)	92083-028	
BOLT,RETURN SPRING (Ref # 9)	92001-1401	
BOLT,RETURN SPRING (Ref # 9)	92001-1401	
SCREW-PAN HEAD (Ref # 10)	92011-023	
WASHER,PLAIN (Ref # 11)	92022-1053	
SPRING-CHANGE LEVER (Ref # 12)	92081-076	
SPRING-COIL (Ref # 13)	92081-077	
SPRING (Ref # 14)	92081-119	

© 2026 Kawasaki Motors Corp., U.S.A.