1977 KZ400-A1

PARTS DIAGRAM

FENDERS

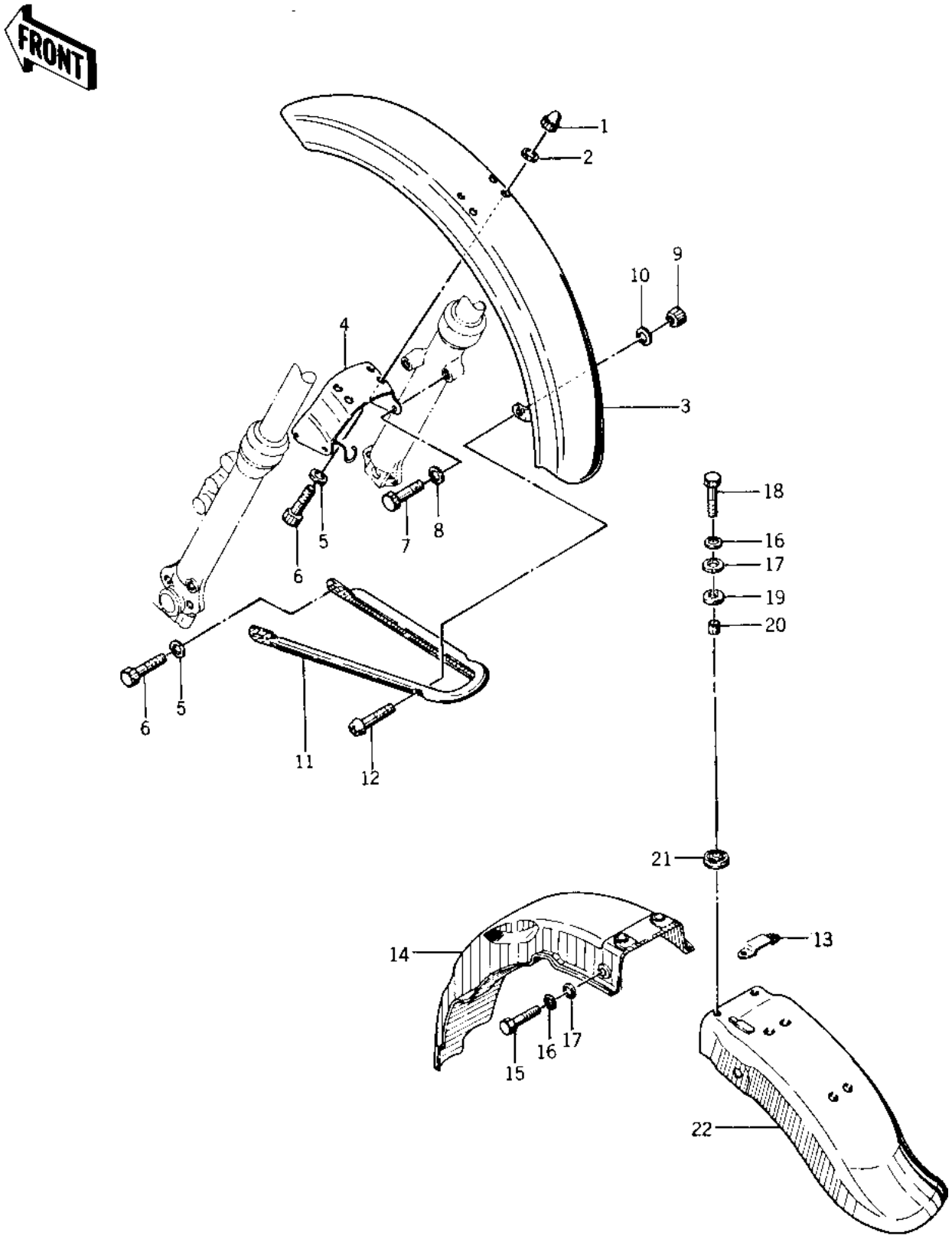

© 2026 Kawasaki Motors Corp., U.S.A.

1977 KZ400-A1

PARTS LIST

FENDERS

ITEM NAME	PART NUMBER	QUANTITY
NUT-6MM (Ref # 1)	322N0600	4
WASHER PLAIN 6MM (Ref # 2)	411B0600	4
FENDER-FR (Ref # 3)	35004-095	1
BRACE,FRONT FENDER (Ref # 4)	35009-032	1
WASHER SPRING 6MM (Ref # 5)	461F0600	6
BOLT-UPSET,6X12 (Ref # 6)	112G0612	6
BOLT-SMALL-UPSET,8X16 (Ref # 7)	115G0816	4
WASHER SPRING 8MM (Ref # 8)	461F0800	4
NUT,5MM (Ref # 9)	311B0500	2
WASHER SPRING 5MM (Ref # 10)	461F0500	2
STAY,FRONT FENDER (Ref # 11)	35010-027	1
SCREW,OVL CNTSNK,5X20 (Ref # 12)	222E0520A	2
PLATE,REAR FENDER (Ref # 13)	35042-003	1
FENDER-RR (Ref # 14)	35022-138	1
BOLT-UPSET (Ref # 15)	112G0618	2
WASHER SPRING 6MM (Ref # 16)	461F0600	4
WASHER,PLAIN,7MM (Ref # 17)	92022-228	4
BOLT-UPSET (Ref # 18)	112G0625	2
COLLAR (Ref # 20)	92027-241	2
DAMPER RUBBER (Ref # 21)	92075-175	2
FENDER-RR (Ref # 22)	35022-114	1

© 2026 Kawasaki Motors Corp., U.S.A.