1977 KZ400-A1

PARTS DIAGRAM

WHEELS/TIRES

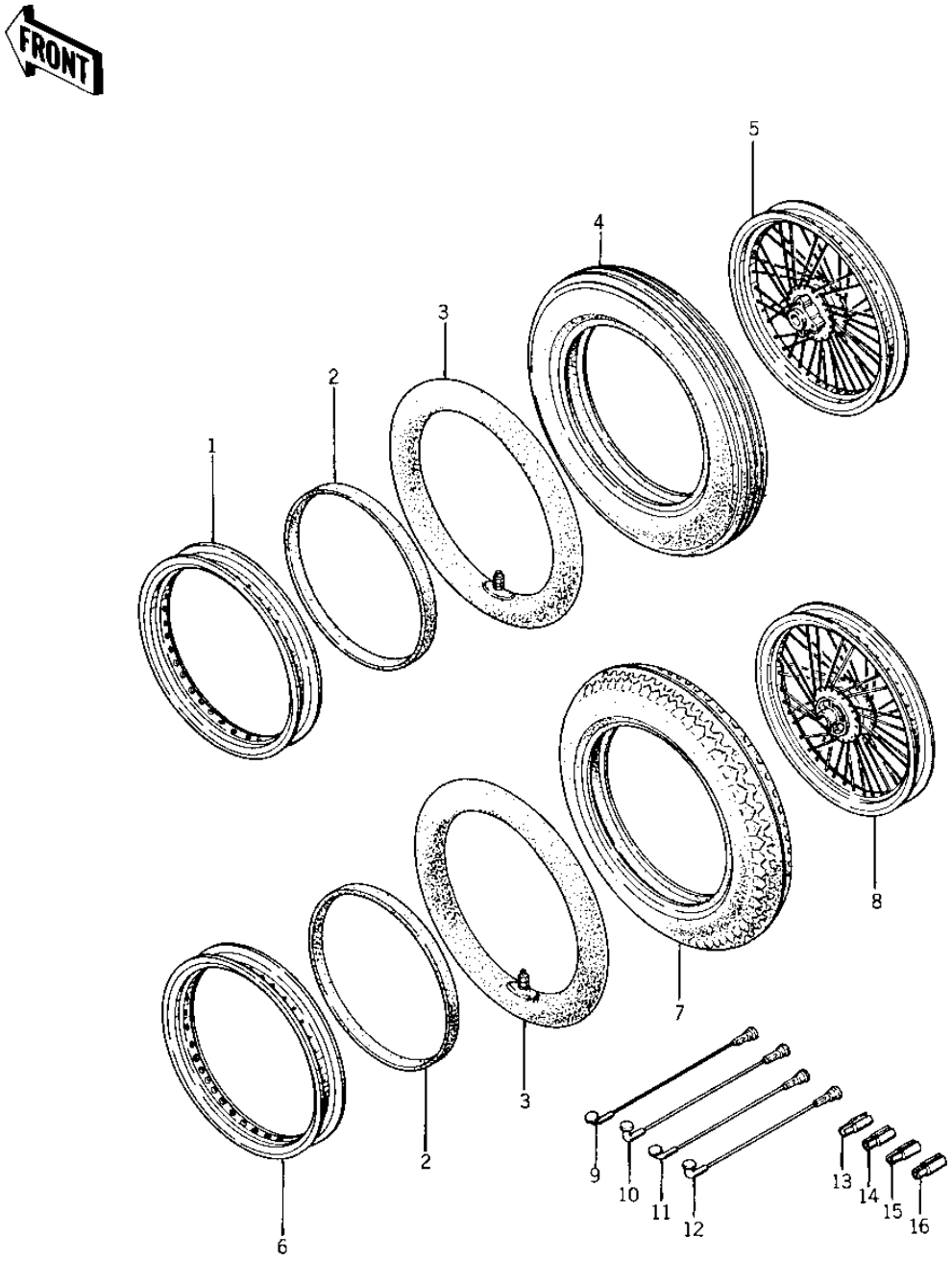

© 2026 Kawasaki Motors Corp., U.S.A.

1977 KZ400-A1

PARTS LIST

WHEELS/TIRES

ITEM NAME	PART NUMBER	QUANTITY
RIM.1.85BX18 (Ref # 1)	41025-075	1
BAND,RIM,4.00/5.10-18 (Ref # 2)	41023-1006	2
BAND,RIM,4.00/5.10-18 (Ref # 2)	41023-1006	2
TUBE 300/325/360-18 (Ref # 3)	41022-028	2
TIRE 325S-18 Y984C F (Ref # 4)	41002-1011	1
WHEEL ASSY,FRONT (Ref # 5)	41074-045	1
RIM,1.85BX18W (Ref # 6)	41025-053	1
TIRE 350S-18 Y987C R (Ref # 7)	41002-1012	1
WHEEL ASSY,REAR (Ref # 8)	42048-031	1
SPOKE-ASY,FR INNER (Ref # 9)	41027-054	20
SPOKE-ASY,FR OUTER (Ref # 10)	41028-054	20
SPOKE-ASY,RR INNER (Ref # 11)	41027-046	20
SPOKE-ASY,RR OUTER (Ref # 12)	41028-045	20
WEIGHT,BALANCE,10G (Ref # 13)	41075-1007	AR
WEIGHT,BALANCE,10G (Ref # 13)	41075-1007	AR
WEIGHT,BALANCE,20G (Ref # 14)	41075-1008	AR
WEIGHT,BALANCE,20G (Ref # 14)	41075-1008	AR
WEIGHT,BALANCE,30G (Ref # 15)	41075-1009	AR
WEIGHT,BALANCE,30G (Ref # 15)	41075-1009	AR
WEIGHT,BALANCE,5G (Ref # 16)	41075-1010	AR
WEIGHT,BALANCE,5G (Ref # 16)	41075-1010	AR

© 2026 Kawasaki Motors Corp., U.S.A.