1979 KDX400

PARTS DIAGRAM

FRONT HUB/BRAKE

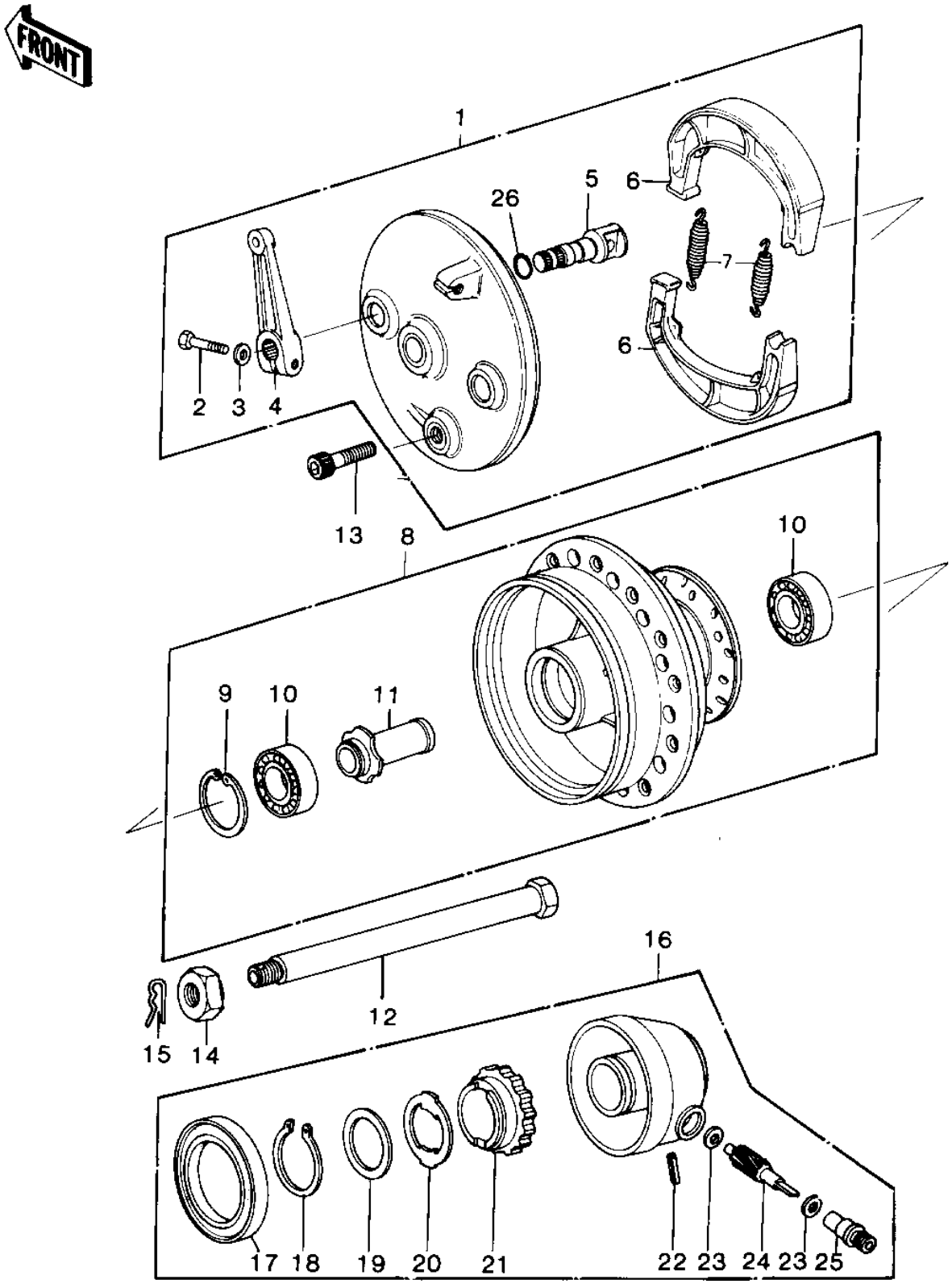

© 2026 Kawasaki Motors Corp., U.S.A.

1979 KDX400

PARTS LIST

FRONT HUB/BRAKE

ITEM NAME	PART NUMBER	QUANTITY
PANEL-ASY,FR BRK (Ref # 1)	41035-1002	1
BOLT-UPSET (Ref # 2)	112G0622	1
WASHER PLAIN 6MM (Ref # 3)	410B0600	1
LEVER,FRONT BRAKE CAM (Ref # 4)	41053-1003	1
CAM SHAFT,BRAKE (Ref # 5)	41050-1002	1
SHOE-BRAKE (Ref # 6)	41048-1068	2
SPRING-BRAKE SHOE (Ref # 7)	42020-004	2
DRUM-ASSY,FR BRK (Ref # 8)	41034-4001	1
CIRCLIP,42MM (Ref # 9)	92033-1041	1
BEARING,FRONT DRUM (Ref # 10)	92045-033	2
COLLAR,FRONT BRAKE (Ref # 11)	92027-1034	1
AXLE,FRONT (Ref # 12)	41068-4001	1
BOLT,SOCKET,10X40 (Ref # 13)	92001-4002	1
NUT,14MM (Ref # 14)	42045-020	1
PIN,COTTER (Ref # 15)	550D3230	1
GEAR BOX ASSY (Ref # 16)	41078-011	1
OIL SEAL,#50659 (Ref # 17)	654A506509	1
CIRCLIP 24MM (Ref # 18)	480J2400	1
WASHER,THRUST (Ref # 19)	41065-005	1
RECEIVER,SPEEDOMETER (Ref # 20)	41064-015	1
GEAR,SPEEDOMETER (Ref # 21)	41059-027	1
PIN,SPRING (Ref # 22)	41082-001	1
WASHER THRST SPD PINI (Ref # 23)	41063-001	2
PINION,SPEEDOMETER (Ref # 24)	41060-015	1
BUSH,SPEEDMETER CABLE (Ref # 25)	41062-005	1
"O" RING,15MM (Ref # 26)	670B2015	1

© 2026 Kawasaki Motors Corp., U.S.A.