1979 KDX400

PARTS DIAGRAM

WHEELS/TIRES

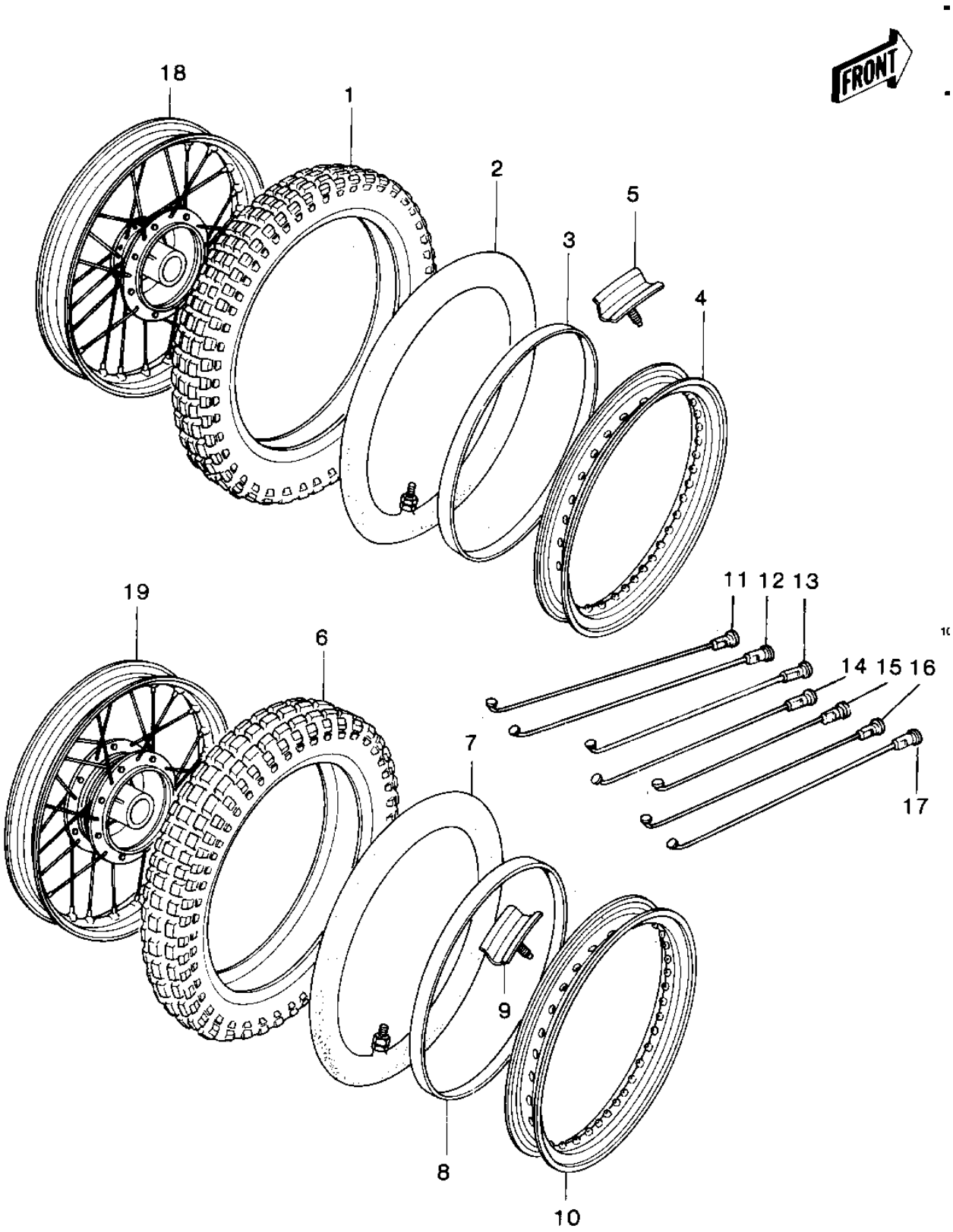

© 2026 Kawasaki Motors Corp., U.S.A.

1979 KDX400

PARTS LIST

WHEELS/TIRES

ITEM NAME	PART NUMBER	QUANTITY
TIRE 300-21 K190 F (Ref # 1)	41002-4006	1
TUBE,2.75/3.70-21 (Ref # 2)	41022-1021	1
BAND,RIM,3.00-21 (Ref # 3)	41023-1001	1
RIM,FRONT,1.60X21 (Ref # 4)	41025-4001	1
PROTECTOR,BEAD 1.60A (Ref # 5)	41024-010	1
TIRE 450-18 K190 R (Ref # 6)	41002-4007	1
TUBE 450/475/550-18 (Ref # 7)	41022-1015	1
BAND,RIM,4.00/5.10-18 (Ref # 8)	41023-1006	1
STOPPER,RIM,2.50 (Ref # 9)	41024-4001	1
RIM,REAR,2.50X18 (Ref # 10)	41025-4002	1
SPOKE-ASY,FR INNER LH (Ref # 11)	41027-5013	9
SPOKE-ASY,FR RH (Ref # 12)	41027-5014	18
SPOKE-ASY,FR OUTER LH (Ref # 13)	41028-5012	9
SPOKE-ASY,RR INNER LH (Ref # 14)	41027-5015	9
SPOKE-ASY,RR INNER RH (Ref # 15)	41027-5016	9
SPOKE-ASY,RR OUTER LH (Ref # 16)	41028-5013	9
SPOKE-ASY,RR OUTER RH (Ref # 17)	41028-5014	9
WHEEL ASS'Y,FRONT (Ref # 18)	41073-4001	1
WHEEL ASS'Y,REAR (Ref # 19)	41073-4002	1

© 2026 Kawasaki Motors Corp., U.S.A.