1979 KDX400

PARTS DIAGRAM

FRAME/FRAME FITTINGS

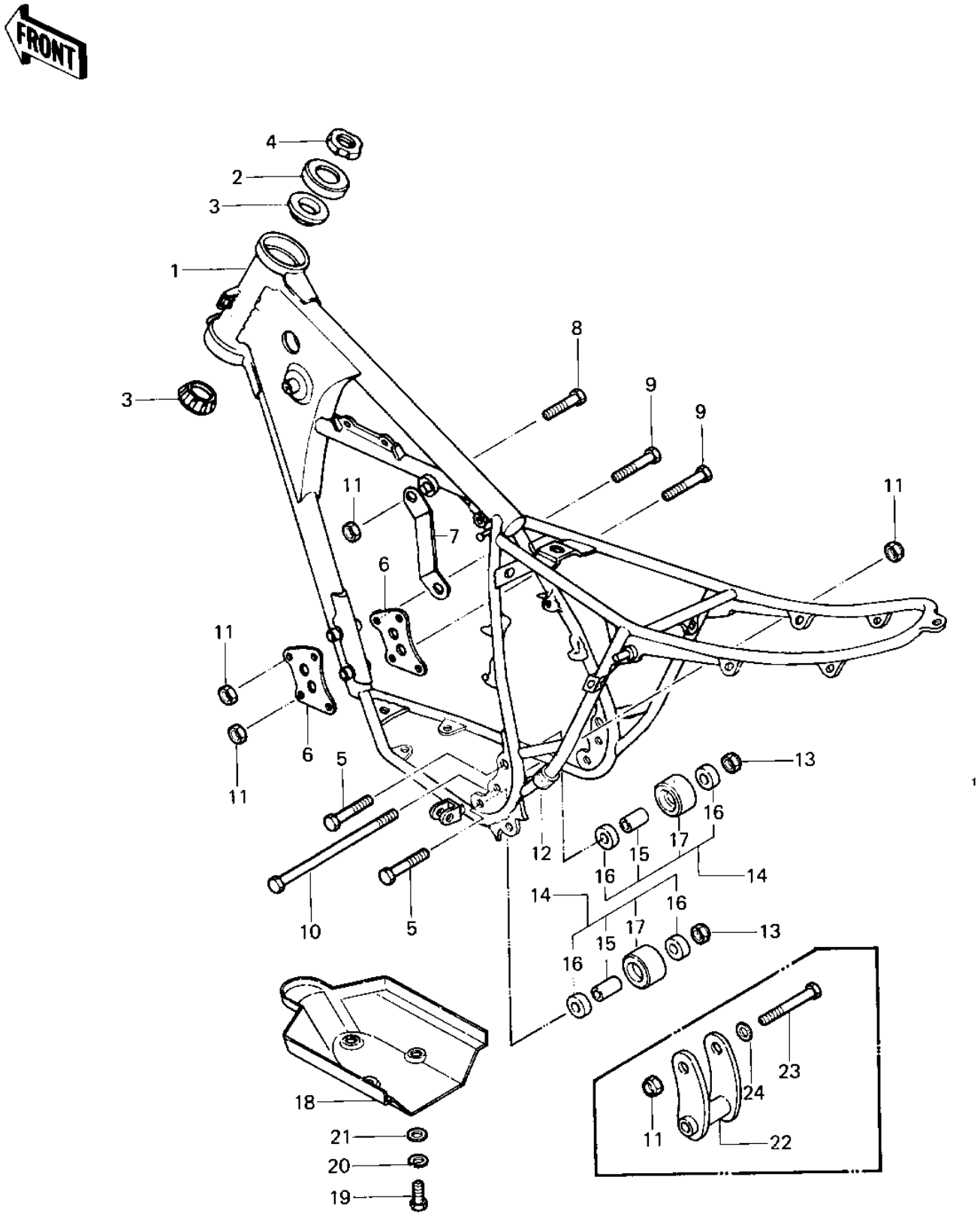

© 2026 Kawasaki Motors Corp., U.S.A.

1979 KDX400

PARTS LIST

FRAME/FRAME FITTINGS

Kawasaki
Let the Good Times Roll®

ITEM NAME	PART NUMBER	QUANTITY
FRAME (Ref # 1)	32002-4004	1
CAP,STEERING STEM (Ref # 2)	46098-015	1
BEARING,STEERING STEM (Ref # 3)	92047-017	2
NUT (Ref # 4)	92015-1546	1
BOLT-SMALL-UPSET,8X55 (Ref # 5)	115G0855	2
BRACKET,ENGINE (Ref # 6)	32029-4006	2
BRACKET,ENGINE (Ref # 7)	32029-4008	1
BOLT,HEX HEAD,10X58 (Ref # 8)	92001-1030	1
BOLT HEX HEAD,10X66.5 (Ref # 9)	92001-1033	4
BOLT,HEX HEAD,10X127 (Ref # 10)	92001-4001	1
NUT,LOCK,10MM (Ref # 11)	92019-021	7
GUARD, FRAME (Ref # 12)	55020-4004	1
NUT,LOCK,8MM (Ref # 13)	92015-1124	2
ROLLER,CHAIN ADJUST (Ref # 14)	92122-4004	2
SPACER,CHN GDE ROLLER (Ref # 15)	92027-4007	2
BEARING,BALL (Ref # 16)	92045-1009	4
ROLLER (Ref # 17)	92122-1014	2
SKID PLATE (Ref # 18)	55020-4003	1
BOLT-UPSET,6X16 (Ref # 19)	112G0616	3
WASHER SPRING 6MM (Ref # 20)	461F0600	3
WASHER-PLAIN,7MM (Ref # 21)	92022-240	3
BRACKET,ENGINE (Ref # 22)	32029-4007	1
BOLT (Ref # 23)	92003-133	1
WASHER CYL HEAD BOLT (Ref # 24)	92022-099	1

© 2026 Kawasaki Motors Corp., U.S.A.