1979 KDX400

PARTS DIAGRAM

IGNITION/GENERATOR

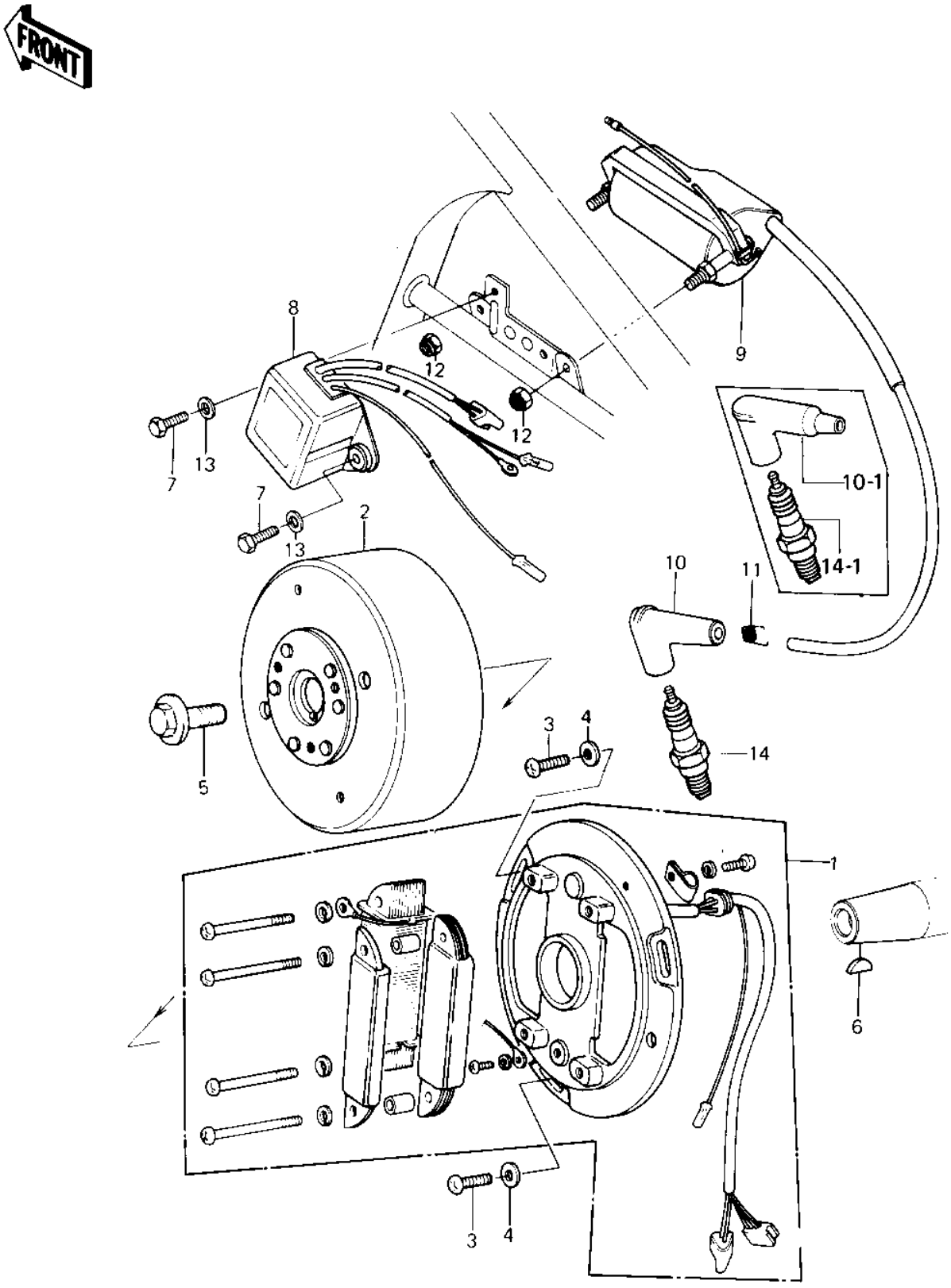

© 2026 Kawasaki Motors Corp., U.S.A.

1979 KDX400

PARTS LIST

IGNITION/GENERATOR

ITEM NAME	PART NUMBER	QUANTITY
STATOR ASSY (Ref # 1)	21003-1032	1
FLYWHEEL,MAGNETO (Ref # 2)	21007-1012	1
SCREW PAN HEAD 5X20 (Ref # 3)	220B0520	3
WASHER PLAIN 5MM (Ref # 4)	411B0500	3
BOLT,10X40 (Ref # 5)	92001-1201	1
WOODRUFF KEY (Ref # 6)	92038-001	1
BOLT-UPSET (Ref # 7)	112G0618	2
IGNITER (Ref # 8)	21119-1009	1
COIL,IGNITION (Ref # 9)	21121-1024	1
CAP SPARK PLUG (Ref # 10)	21130-009	1
CAP ASSY,SPARK PLUG (Ref # 10-1)	21160-1009	1
SPRING-SPARK PLUG CAP (Ref # 11)	92101-001	1
NUT (Ref # 12)	92019-008	2
WASHER PLAIN (Ref # 13)	92022-024	2
SPARK PLUG B8ES (Ref # 14)	B8ES	1
SPARK PLUG BR8ES (Ref # 14-1)	BR8ES	1

© 2026 Kawasaki Motors Corp., U.S.A.