1980 KDX400

PARTS DIAGRAM

MUFFLER

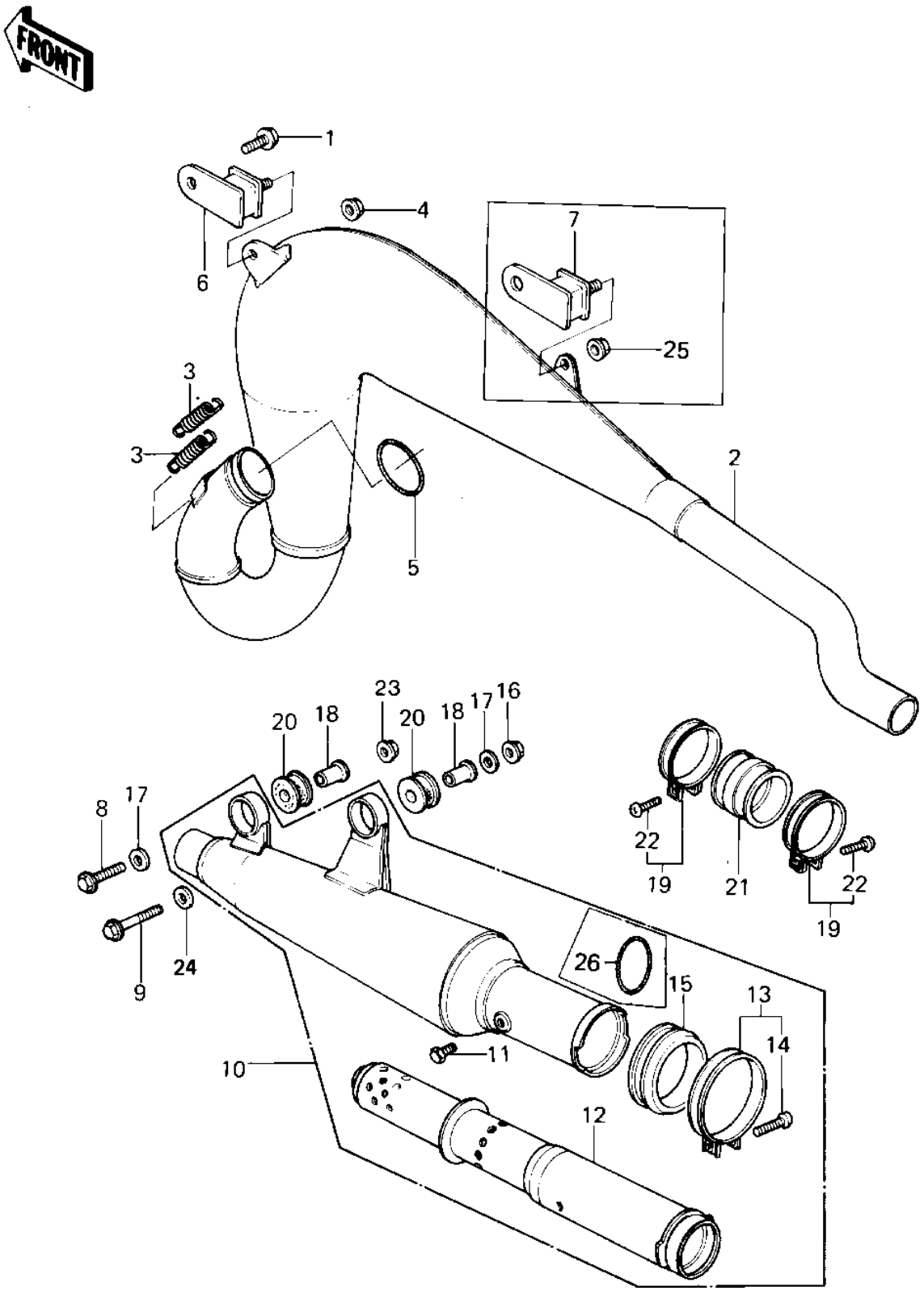

© 2026 Kawasaki Motors Corp., U.S.A.

1980 KDX400

PARTS LIST

MUFFLER

ITEM NAME	PART NUMBER	QUANTITY
BOLT,FLANGED,8X14 (Ref # 1)	130G0814	1
BODY,MUFFLER,F.BLACK (Ref # 2)	18001-1110	1
SPRING-CONNECTOR (Ref # 3)	18071-003	2
NUT,8M/M (Ref # 4)	92015-1014	1
"0" RING,55MM,MUFFLER (Ref # 5)	92055-1057	1
DAMPER,MUFFLER FITING (Ref # 6)	92075-1060	1
BOLT,FLANGED,8X35 (Ref # 8)	130G0835	1
BOLT,FLANGED,8X55 (Ref # 9)	130G0855	1
MUFFLER ASSY,F.BLACK (Ref # 10)	18001-1109	1
BOLT,FLANGED,6X8 (Ref # 11)	130B0608	1
BAFFLE PIPE,MUFFLER (Ref # 12)	49099-1011	1
NUT,LOCK,8MM (Ref # 16)	92015-1124	1
WASHER,PLAIN (Ref # 17)	92022-298	1
COLLAR,FUEL TANK FITT (Ref # 18)	92027-1134	2
CLAMP,MUFFLER (Ref # 19)	92037-177	2
DAMPER,MUFFLER (Ref # 20)	92075-1196	2
DUST SHIELD,MUFFLER (Ref # 21)	92093-1014	1
SCREW-PAN-CROS,5X25 (Ref # 22)	220B0525	2
NUT,LOCK,8MM (Ref # 23)	92015-1124	1
WASHER,PLAIN (Ref # 24)	92022-298	2
"0" RING,50.8MM,MUFLR (Ref # 26)	92055-1077	1

© 2026 Kawasaki Motors Corp., U.S.A.