1980 KDX400

PARTS DIAGRAM

ENGINE COVERS

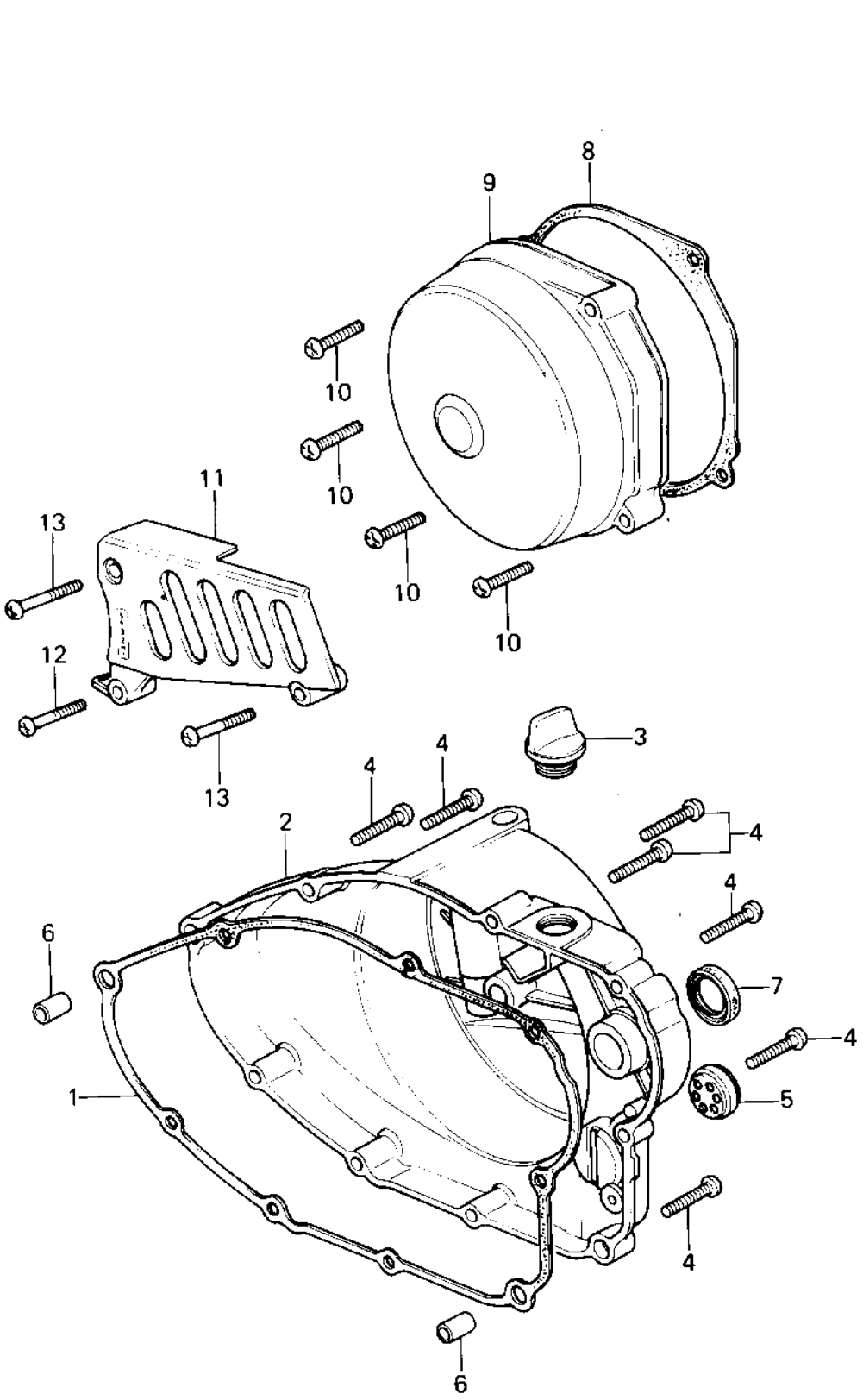

© 2026 Kawasaki Motors Corp., U.S.A.

1980 KDX400

PARTS LIST

ENGINE COVERS

ITEM NAME	PART NUMBER	QUANTITY
GASKET,CLUTCH COVER (Ref # 1)	11009-1131	1
COVER,CLUTCH,F.BLACK (Ref # 2)	14032-1021	1
FILLER,OIL (Ref # 3)	16115-018	1
SCREW PAN HEAD 6X30 (Ref # 4)	220B0630	9
GAUGE,OIL LEVEL (Ref # 5)	52015-004	1
PIN,DOWEL,10X8.2X14 (Ref # 6)	92043-1037	2
OIL SEAL SB20285 (Ref # 7)	92049-012	1
GASKET,MAGNETO COVER (Ref # 8)	11009-1132	1
COVER,MAGNETO,F.BLACK (Ref # 9)	14031-1035	1
SCREW PAN HEAD 6X30 (Ref # 10)	220B0630	4
COVER,FRONT CHAIN (Ref # 11)	14026-1012-21	1
SCREW PAN HEAD 6X35 (Ref # 12)	220B0635	1
SCREW PAN HEAD 6X40 (Ref # 13)	220B0640	2

© 2026 Kawasaki Motors Corp., U.S.A.