1979 KDX400

PARTS DIAGRAM

CLUTCH

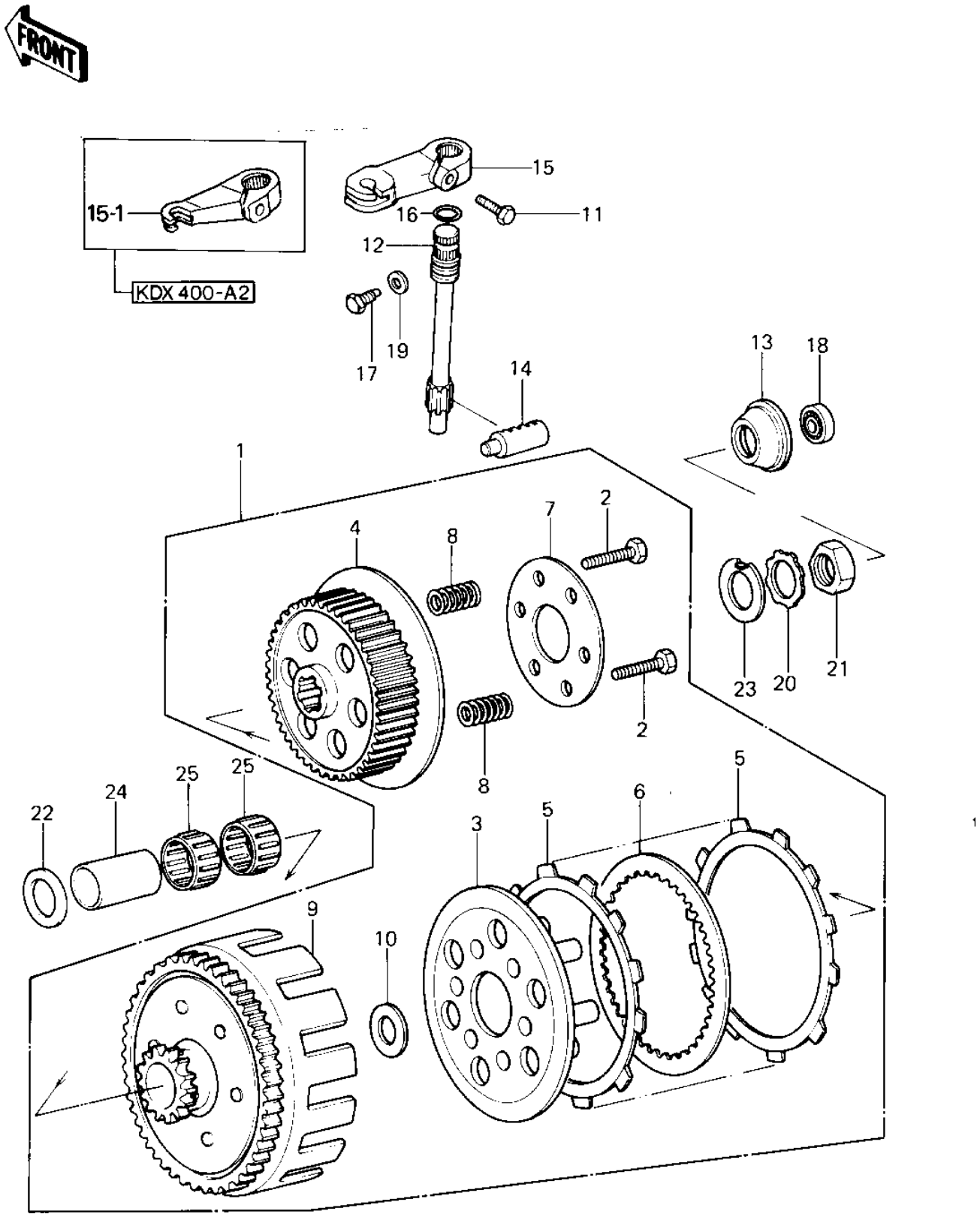

© 2026 Kawasaki Motors Corp., U.S.A.

1979 KDX400

PARTS LIST

CLUTCH

ITEM NAME	PART NUMBER	QUANTITY
CLUTCH-ASSY (Ref # 1)	13081-1027	1
BOLT-UPSET (Ref # 2)	112G0618	6
WHEEL,CLUTCH (Ref # 3)	13086-016	1
HUB,CLUTCH (Ref # 4)	13087-1012	1
PLATE,CLUTCH FRICTION (Ref # 5)	13088-041	6
PLATE,CLUTCH STEEL (Ref # 6)	13089-025	5
PLATE,CLUTCH SPRING (Ref # 7)	13091-016	1
SPRING,CLUTCH (Ref # 8)	92081-1151	6
HOUSING,CLUTCH (Ref # 9)	13095-1017	1
WASHER,CLUTCH THRUST (Ref # 10)	92022-282	1
BOLT-UPSET (Ref # 11)	112G0618	1
SHAFT,CLUTCH RELEASE (Ref # 12)	13106-008	1
HOLDER,CLUTCH PUSHER (Ref # 13)	13091-1071	1
ROD,CLUTCH PUSH (Ref # 14)	13116-025	1
LEVER,CLUTCH RELEASE (Ref # 15)	13168-1010	1
"0" RING, 10MM (Ref # 16)	670B2010	1
BOLT,CLUTCH RELEASE (Ref # 17)	92003-130	1
BEARING,BALL (Ref # 18)	92045-1005	1
GASKET,R.H ENG COVER (Ref # 19)	92065-092	1
WASHER,LOCK,16MM (Ref # 20)	464H1600	1
NUT,16M/M (Ref # 21)	92015-1016	1
WASHER,PLAIN (Ref # 22)	92022-314	1
WASHER,16.8X32X1.6 (Ref # 23)	92022-1277	1
BUSHING,CLUT,20X25X40 (Ref # 24)	92028-1067	1
BEARING,NEEDLE (Ref # 25)	92046-1003	2

© 2026 Kawasaki Motors Corp., U.S.A.