1968 Avenger

PARTS DIAGRAM

MUFFLER/SPARK ARRESTER A1SS, A7SS

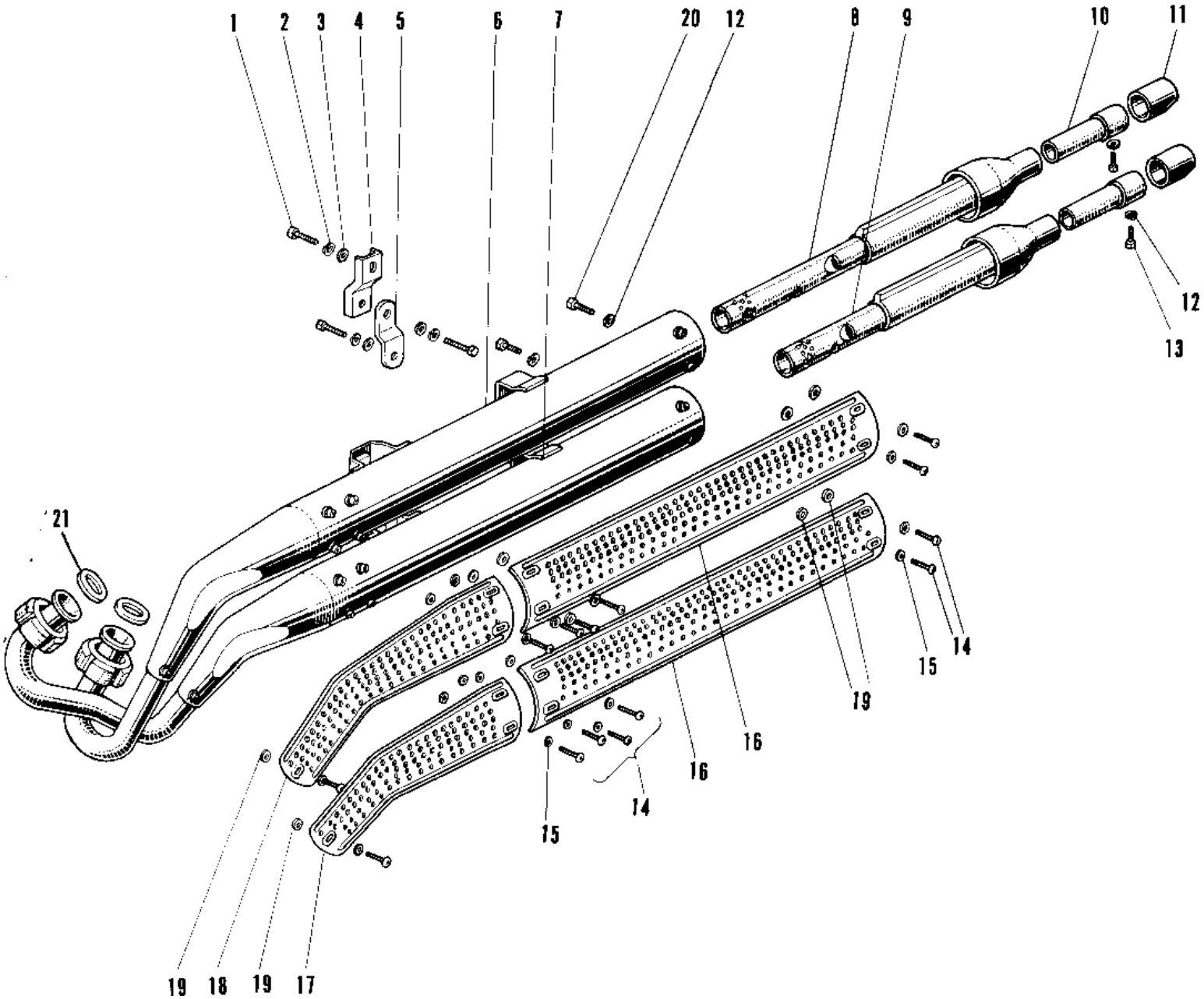

© 2026 Kawasaki Motors Corp., U.S.A.

1968 Avenger

PARTS LIST

MUFFLER/SPARK ARRESTER A1SS, A7SS

ITEM NAME	PART NUMBER	QUANTITY
BOLT,8X20 (Ref # 1)	115G0820	2
WASHER SPRING 8MM (Ref # 2)	461F0800	2
WASHER PLAIN 8MM (Ref # 3)	410B0800	2
BRACKET UPPER MUFFLER (Ref # 4)	18061-007	1
BRACKET LOWER MUFFLER (Ref # 5)	18061-008	1
MUFFLER ASSY UPPER (Ref # 6,8,10)	18002-057	1
MUFFLER ASSY LOWER (Ref # 7,9,10)	18003-024	1
SPARK ARRESTOR COMP U (Ref # 8)	18033-020	1
SPARK ARRESTOR COMP L (Ref # 9)	18033-022	1
BAFFLE TUBE (Ref # 10)	18033-039	2
BAFFLE TUBE (Ref # 10)	18033-023	2
TAIL PIECE (Ref # 11)	18048-006	2
WASHER SPRING 6MM (Ref # 12)	461F0600	4
BOLT,6X10 (Ref # 13)	112G0610	2
SCREW PAN HEAD 6X10 (Ref # 13)	220B0610	2
SCREW PAN HEAD 6X8 (Ref # 14)	220E0608	14
WASHER PLAIN 6MM (Ref # 15)	411B0600	14
COVER MUFFLER REAR (Ref # 16)	18057-014	2
COVER MUFFLER LOWER (Ref # 17)	18057-013	1
COVER MUFFLER UPPER (Ref # 18)	18057-012	1
INSULATOR HEAT (Ref # 19)	18065-002	14
BOLT,6X10 (Ref # 20)	112G0610	2
GASKET EXHAUST PIPE (Ref # 21)	18067-008	2

© 2026 Kawasaki Motors Corp., U.S.A.