1995 750 SX

PARTS DIAGRAM

Intake Silencer

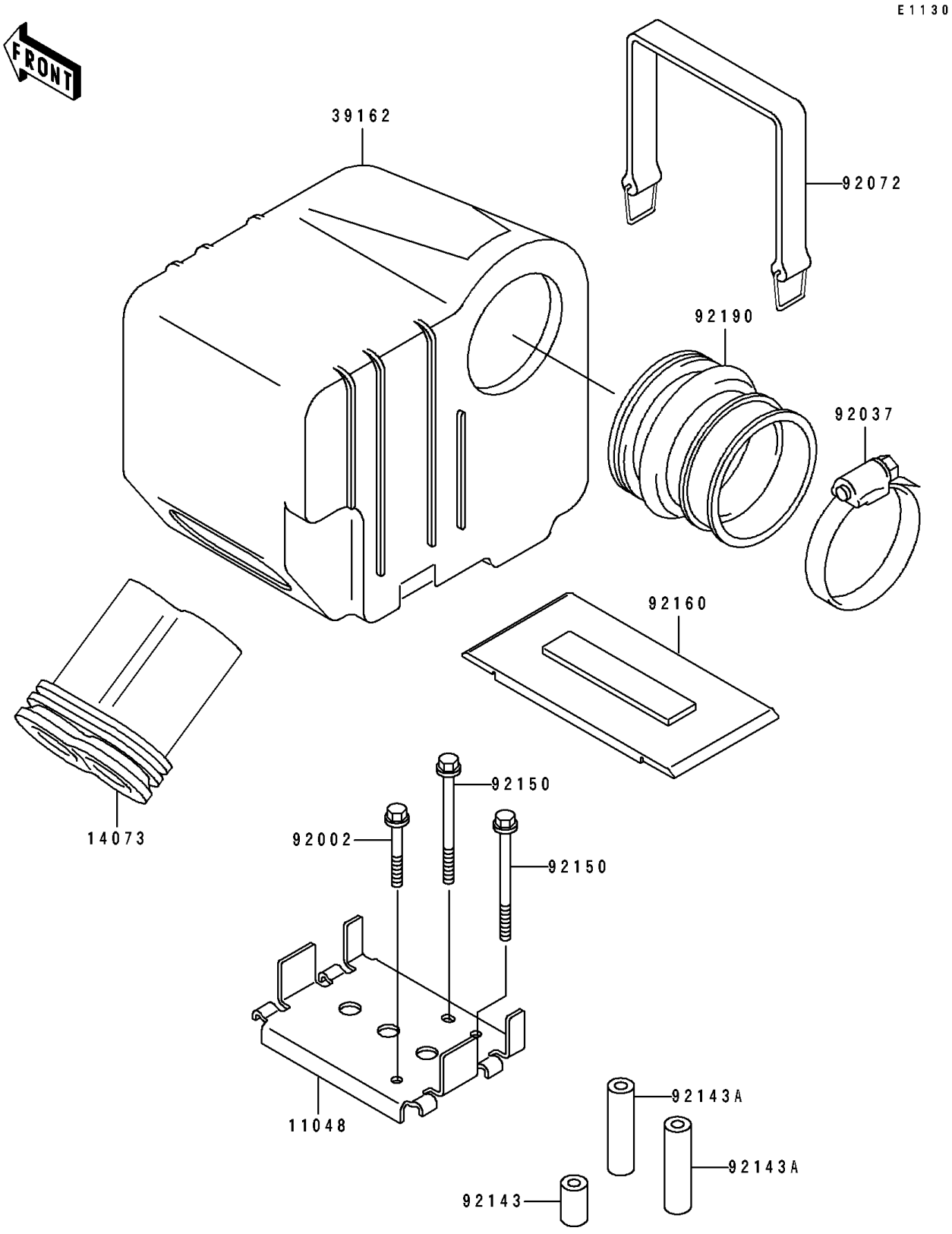

© 2026 Kawasaki Motors Corp., U.S.A.

1995 750 SX

PARTS LIST

Intake Silencer

ITEM NAME	PART NUMBER	QUANTITY

© 2026 Kawasaki Motors Corp., U.S.A.