1979 KLR250

PARTS DIAGRAM

IGNITION

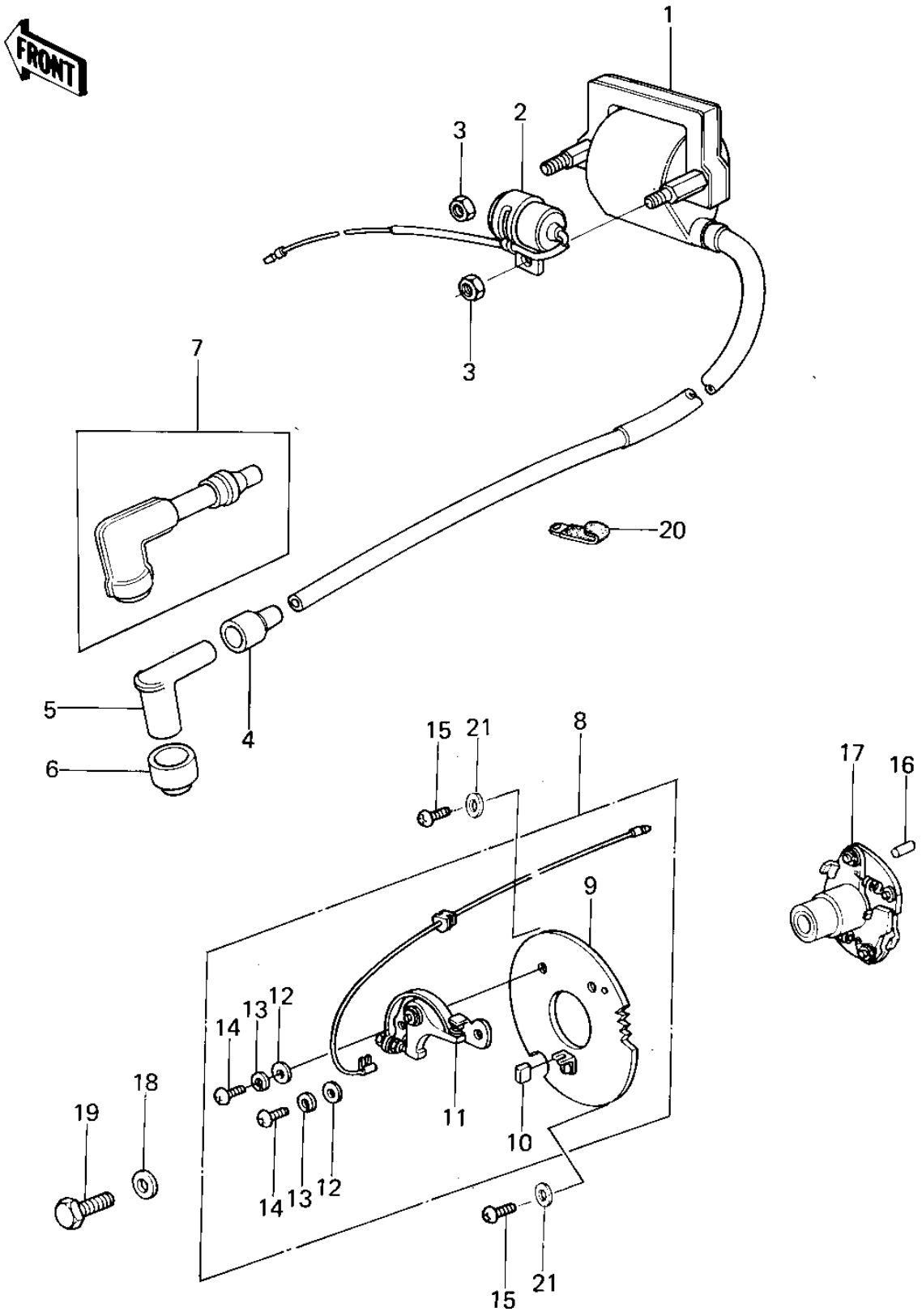

© 2026 Kawasaki Motors Corp., U.S.A.

1979 KLR250

PARTS LIST

IGNITION

ITEM NAME	PART NUMBER	QUANTITY
COIL-IGNITION (Ref # 1)	21121-043	1
CONDENSER (Ref # 2)	21013-036	1
NUT,6M/M (Ref # 3)	311G0600	2
GROMMET,SPARK PLG CAP (Ref # 4)	21132-005	1
CAP-SPARK PLUG,RTFM20 (Ref # 5)	21130-1007	1
GROMMET-PLUG CAP,A (Ref # 6)	21131-004	1
CAP,SPARK PLUG (Ref # 7)	21160-005	1
BREAKER ASSY, CONTACT (Ref # 8)	21135-013	1
BASE,CONTACT BREAKER (Ref # 9)	21021-1001	1
FELT OIL (Ref # 10)	21019-005	1
BREAKER,CONTACT (Ref # 11)	21008-1002	1
WASHER PLAIN 4MM (Ref # 12)	410B0400	2
WASHER SPRING 4MM (Ref # 13)	461F0400	2
SCREW PAN HEAD 4X6 (Ref # 14)	220B0406	2
SCREW PAN HEAD 6X10 (Ref # 15)	220B0610	2
PIN DOWEL 3X8 (Ref # 16)	551A0308	1
GOVERNOR,BREAKER (Ref # 17)	21148-1001	1
WASHER,PLAIN (Ref # 18)	92022-323	1
BOLT,6X14 (Ref # 19)	92003-221	1
CLAMP,WIRING HARNESS (Ref # 20)	21126-008	1
WASHER PLAIN 6MM (Ref # 21)	410B0600	2

© 2026 Kawasaki Motors Corp., U.S.A.