1974 Mach I

PARTS DIAGRAM

METERS/IGNITION SWITCH

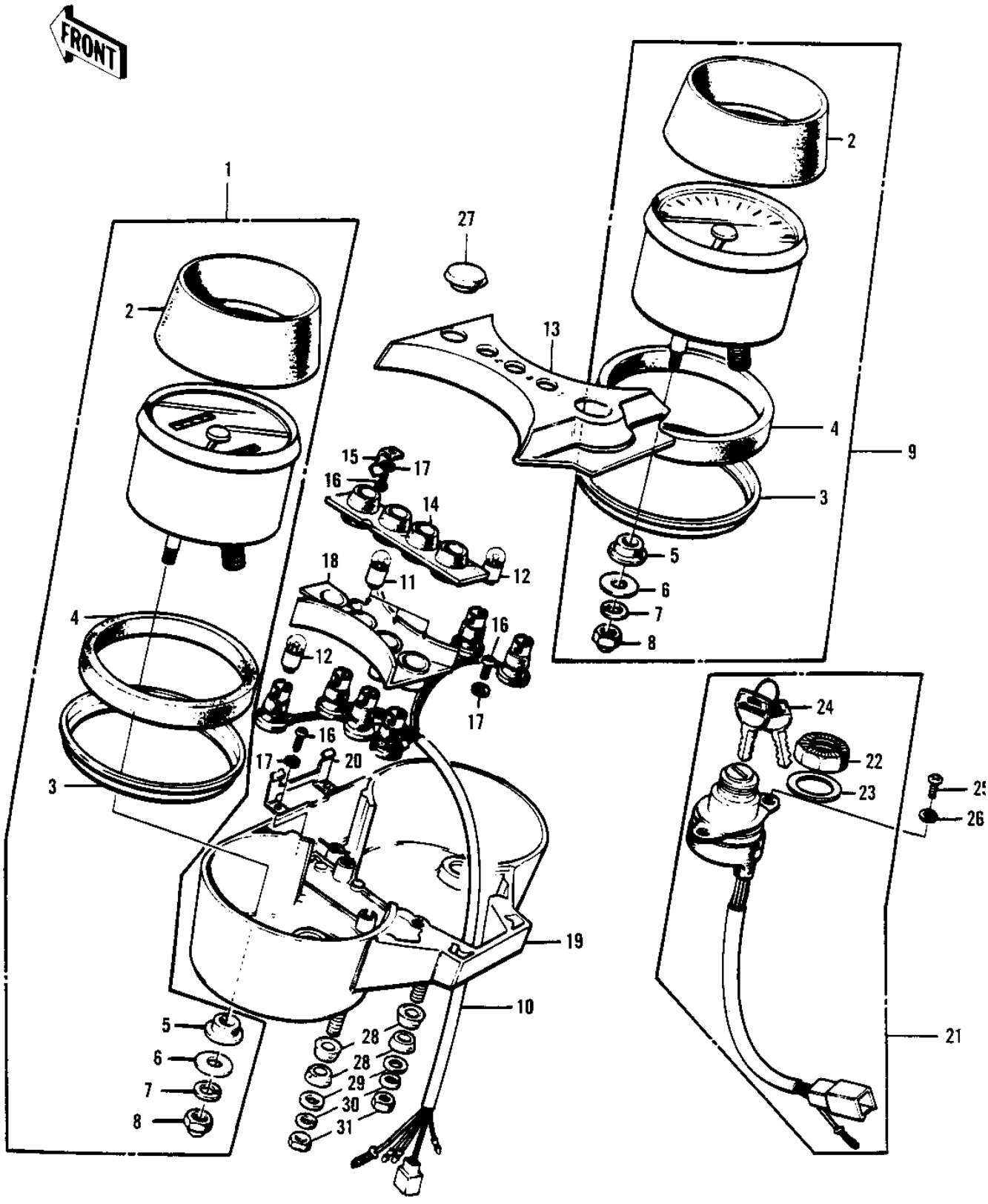

© 2026 Kawasaki Motors Corp., U.S.A.

1974 Mach I

PARTS LIST

METERS/IGNITION SWITCH

ITEM NAME	PART NUMBER	QUANTITY
SPEEDOMETER ASSY,MPH (Ref # 1)	25005-124	
SPEEDOMETER ASSY,MPH (Ref # 1)	25005-124	
SPEEDO ASSY,KPH (Canada) (Ref # 1)	25005-076	
COVER-METER (Ref # 2)	25012-012	
RING-METER (Ref # 3)	25026-001	
DAMPER RUBBER-METER (Ref # 4)	25019-015	
DAMPER RUBBER-METER (Ref # 5)	25019-013	
WASHER PLAIN 5MM (Ref # 6)	411B0500	
WASHER SPRING 5MM (Ref # 7)	461F0500	
NUT,5MM (Ref # 8)	92015-059	
TACHOMETER ASSY (Ref # 9)	25016-020	
SOCKET-METER (Ref # 10)	25011-029	
SOCKET,SPEEDOMETER (Ref # 10)	25011-030	
BULB 12V 1.5W (Ref # 11)	92069-017	
BULB 12V 3W (Ref # 12)	92069-018	
COVER-METER CASE (Ref # 13)	25023-002	
COVER,METER CASE (Ref # 13)	25023-009	
DAMPER RUBBER-METER (Ref # 14)	25019-014	
HOLDER-METER CASE COV (Ref # 15)	25014-004	
SCREW PAN HEAD 4X8 (Ref # 16)	220B0408	
WASHER SPRING 4MM (Ref # 17)	461F0400	
COVER-METER SOCKET (Ref # 18)	25023-003	
CASE-METER (Ref # 19)	25008-026	
HOLDER-METER CASE (Ref # 20)	25014-003	
SWITCH-ASSY (Ref # 21)	27005-1021	
SWITCH-ASSY (Ref # 21)	27005-1021	
NUT-IGNITION SWITCH (Ref # 22)	27007-003	
WASHER-IGNITION (Ref # 23)	27019-002	
KEY SET, #186 (Ref # 24)	27008-048-86	

© 2026 Kawasaki Motors Corp., U.S.A.

1974 Mach I

PARTS LIST

METERS/IGNITION SWITCH

ITEM NAME	PART NUMBER	QUANTITY
KEY SET,#190 (Ref # 24)	27008-048-90	
KEY SET,#901 (Ref # 24)	27008-055-01	
KEY SET,#910 (Ref # 24)	27008-055-10	
KEY,BLANK (Ref # 24)	27008-1024	
KEY,BLANK (Ref # 24)	27008-1025	
SCREW PAN HEAD 5X8 (Ref # 25)	220B0508	
WASHER SPRING 5MM (Ref # 26)	461F0500	
PLUG,RUBBER (Ref # 27)	92074-032	
DAMPER RUBBER (Ref # 28)	92075-080	
WASHER PLAIN 8MM (Ref # 29)	411B0800	
WASHER SPRING 8MM (Ref # 30)	461F0800	
NUT,8MM (Ref # 31)	311B0800	

© 2026 Kawasaki Motors Corp., U.S.A.