1974 Mach I

PARTS DIAGRAM

SIDE COVERS/OIL TANK/CHAIN COVER (S1-B/C

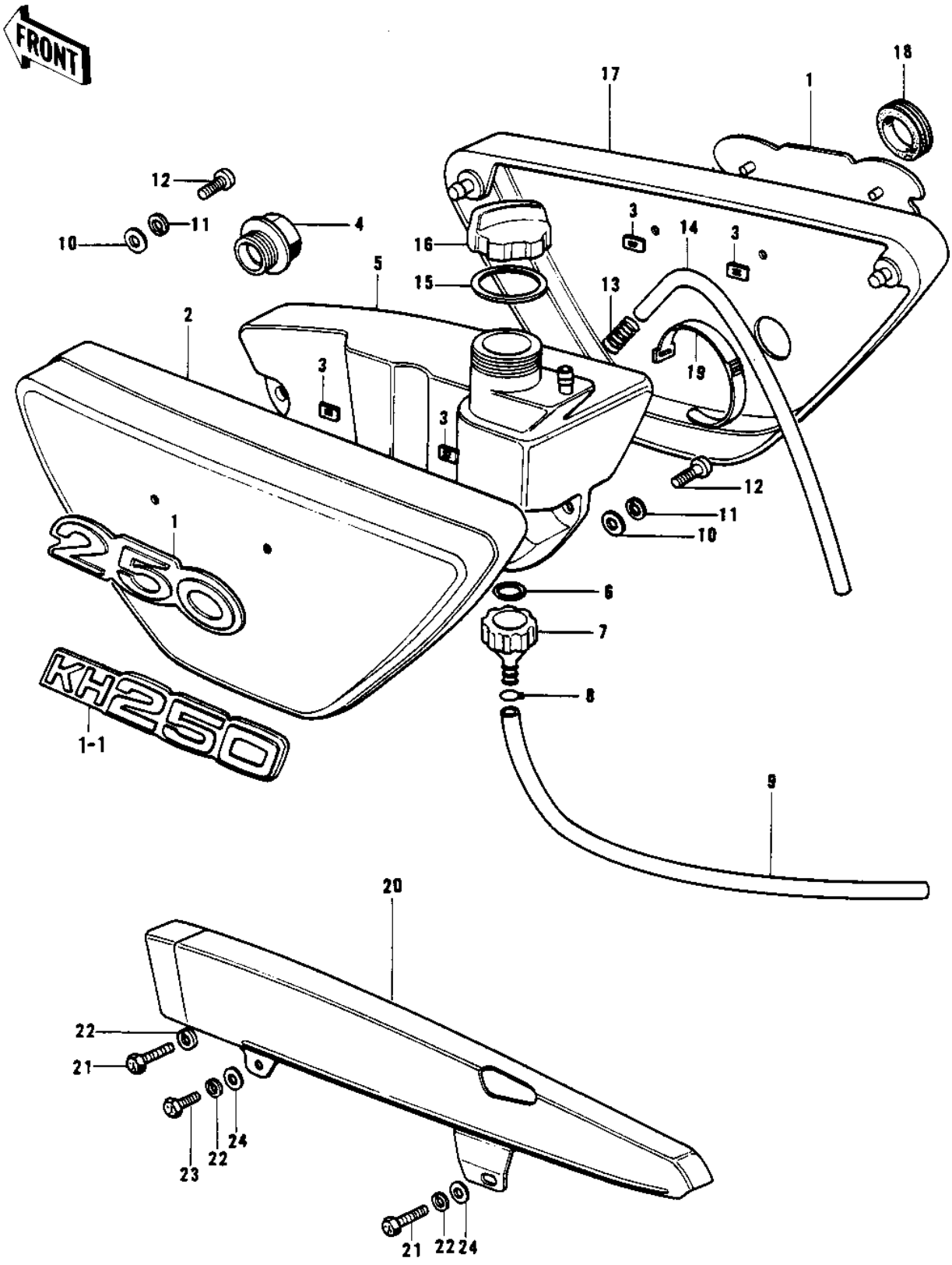

© 2026 Kawasaki Motors Corp., U.S.A.

1974 Mach I

PARTS LIST

SIDE COVERS/OIL TANK/CHAIN COVER (S1-B/C

ITEM NAME	PART NUMBER	QUANTITY
EMBLEM,SIDE COVER (Ref # 1)	56018-163	
EMBLEM,SIDE COVER (Ref # 1)	56018-192	
EMBLEM,SIDE COVER (Ref # 1-1)	56018-211	
COVER,L.H SIDE,C.GREN (Ref # 2)	36001-043-1Z	
COVER,L.H SIDE,BLUE (Ref # 2)	36001-043-2L	
COVER,L.H SIDE,C.RED (Ref # 2)	36001-043-3R	
NUT,LOCK,3MM (Ref # 3)	92018-005	
GAUGE-OIL LEVEL (Ref # 4)	52015-005	
TANK,OIL (Ref # 5)	52001-040	
"O" RING,15MM (Ref # 6)	670B2015	
FILTER-OIL (Ref # 7)	52020-001	
CLAMP FUEL PIPE (Ref # 8)	92037-010	
PIPE-OIL (Ref # 9)	92059-072	
WASHER PLAIN 6MM (Ref # 10)	411B0600	
WASHER SPRING 6MM (Ref # 11)	461F0600	
BOLT-UPSET 6X14 (Ref # 12)	112B0614	
CLAMP,OIL TANK BREATR (Ref # 13)	92037-141	
TUBE-VINYL,5X600 (Ref # 14)	700Q05600	
TUBE-VINYL 5X720 (Ref # 14)	700Q05720	
GASKET-OIL TANK CAP (Ref # 15)	92065-085	
CAP-OIL TANK (Ref # 16)	52003-019	
COVER,RH SIDE,C.GREEN (Ref # 17)	36007-037-1Z	
COVER,RH SIDE,BLUE (Ref # 17)	36007-037-2L	
COVER,RH SIDE,C.RED (Ref # 17)	36007-037-3R	
GROMMET-R.H SIDE COV (Ref # 18)	92071-065	
BAND,MIDDLE (Ref # 19)	92072-031	
CASE-CHAIN,FR BLACK (Ref # 20)	36014-050-21	
BOLT,HEX HEAD,6X14 (Ref # 21)	92001-121	
WASHER SPRING 6MM (Ref # 22)	461F0600	

© 2026 Kawasaki Motors Corp., U.S.A.

1974 Mach I

PARTS LIST

SIDE COVERS/OIL TANK/CHAIN COVER (S1-B/C

ITEM NAME	PART NUMBER	QUANTITY
BOLT,HEX HEAD,6MM (Ref # 23)	92001-137	
WASHER-PLAIN (Ref # 24)	92022-193	

© 2026 Kawasaki Motors Corp., U.S.A.