# 1974 Mach I

## PARTS DIAGRAM

## AIR CLEANER/MUFFLERS

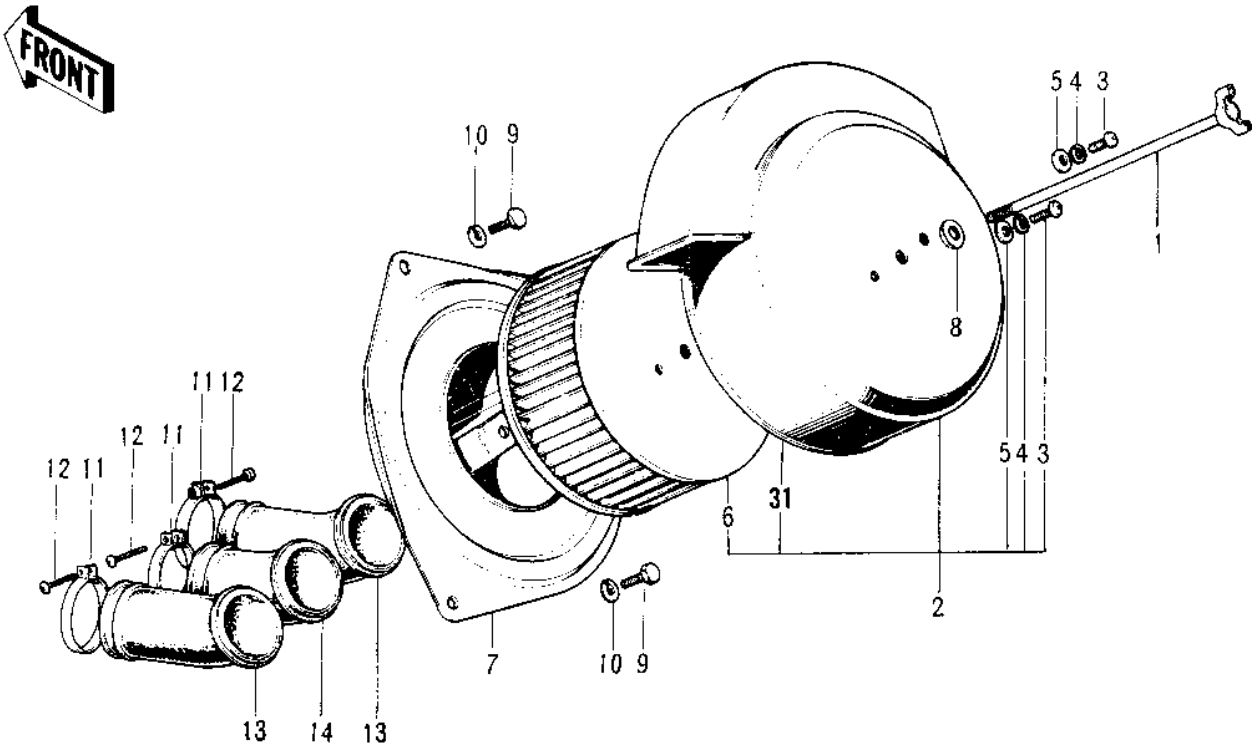


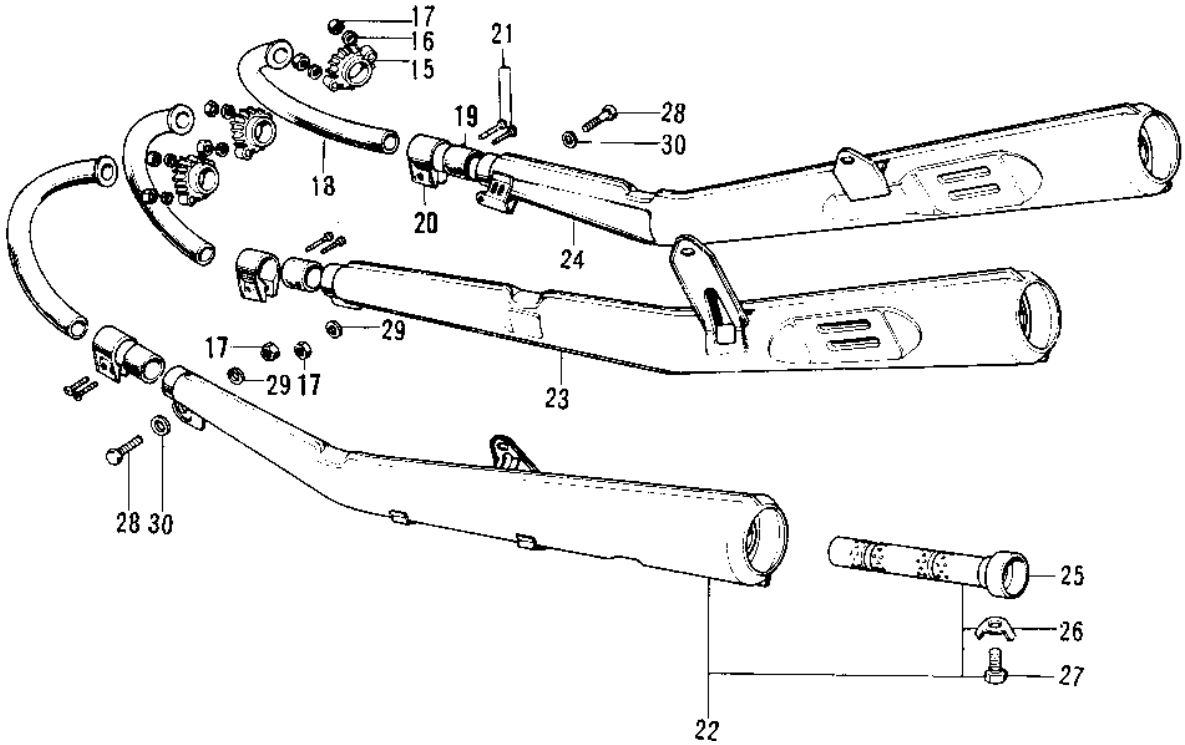


© 2026 Kawasaki Motors Corp., U.S.A.

# 1974 Mach I

## PARTS LIST

## AIR CLEANER/MUFFLERS

Kawasaki
Let the Good Times Roll®

| ITEM NAME | PART NUMBER | QUANTITY |
|---|---|---|
| BOLT-AIR CLEANER FIT (Ref # 1) | 92003-073 | |
| AIR CLEANER ASST,BLK (Ref # 2) | 11010-057-21 | |
| FILTER-ASSY-AIR BLAC (Ref # 2) | 11010-090-21 | |
| FILTER-ASSY-AIR BLAC (Ref # 2) | 11010-090-21 | |
| SCREW PAN HEAD 4X8 (Ref # 3) | 220B0408 | |
| WASHER SPRING 4MM (Ref # 4) | 461F0400 | |
| WASHER PLAIN 4MM (Ref # 5) | 410B0400 | |
| ELEMENT,AIR,CLNR (Ref # 6) | 11013-026 | |
| BODY-AIR CLEANER (Ref # 7) | 11011-013 | |
| WASHER-PLAIN (Ref # 8) | 92022-021 | |
| BOLT,6X10 (Ref # 9) | 112G0610 | |
| WASHER SPRING 6MM (Ref # 10) | 461F0600 | |
| CLAMP,AIR INLET PIPE (Ref # 11) | 92037-065 | |
| CLAMP,CARBURETOR HOLD (Ref # 11) | 92037-1242 | |
| SCREW PAN HEAD 6X35 (Ref # 12) | 220B0635 | |
| SCREW-PAN-CROS,6X35,B (Ref # 12) | 220C0635 | |
| PIPE,AIR INLET,LH&RH (Ref # 13) | 11015-027 | |
| PIPE,AIR INLET,CENTER (Ref # 14) | 11015-028 | |
| HOLDER-EXHAUST PIPE (Ref # 15) | 18069-038 | |
| WASHER SPRING 8MM (Ref # 16) | 461F0800 | |
| NUT,8MM (Ref # 17) | 311B0800 | |
| PIPE,EXHAUST (Ref # 18) | 18049-063 | |
| CONNECTOR MUFFLER (Ref # 19) | 18043-008 | |
| HOLDER-MFLR CONECT,CR (Ref # 20) | 18044-004-79 | |
| SCREW PAN HEAD 6X28 (Ref # 21) | 220B0628 | |
| MUFFLER ASSY,L.H (Ref # 22) | 18001-146 | |
| MUFFLER ASSY,L.H (Ref # 22) | 18001-146 | |
| MUFFLER ASSY,L.H (Ref # 22) | 18001-146 | |
| MUFFLER ASSY,CENTER (Ref # 23) | 18001-147 | |

© 2026 Kawasaki Motors Corp., U.S.A.

# 1974 Mach I

## PARTS LIST

## AIR CLEANER/MUFFLERS

| ITEM NAME | PART NUMBER | QUANTITY |
|---|---|---|
| MUFFLER ASSY,CENTER (Ref # 23) | 18001-147 | |
| MUFFLER ASSY,CENTER (Ref # 23) | 18001-147 | |
| MUFFLER ASSY,R.H (Ref # 24) | 18001-148 | |
| MUFFLER ASSY,R.H (Ref # 24) | 18001-148 | |
| MUFFLER ASSY,R.H (Ref # 24) | 18001-148 | |
| BAFFLE TUBE (Ref # 25) | 18033-050 | |
| BAFFLE TUBE (Ref # 25) | 18033-087 | |
| WASHER LOCK 6MM (Ref # 26) | 92024-016 | |
| BOLT-UPSET,6X12 (Ref # 27) | 112G0612 | |
| BOLT,8X20 (Ref # 28) | 115G0820 | |
| WASHER SPRING 8MM (Ref # 29) | 461F0800 | |
| WASHER PLAIN 8MM (Ref # 30) | 411B0800 | |
| RUBBER SEAL,CLENR CAP (Ref # 31) | 11024-001 | |

© 2026 Kawasaki Motors Corp., U.S.A.