1974 Mach I

PARTS DIAGRAM

CARBURETORS

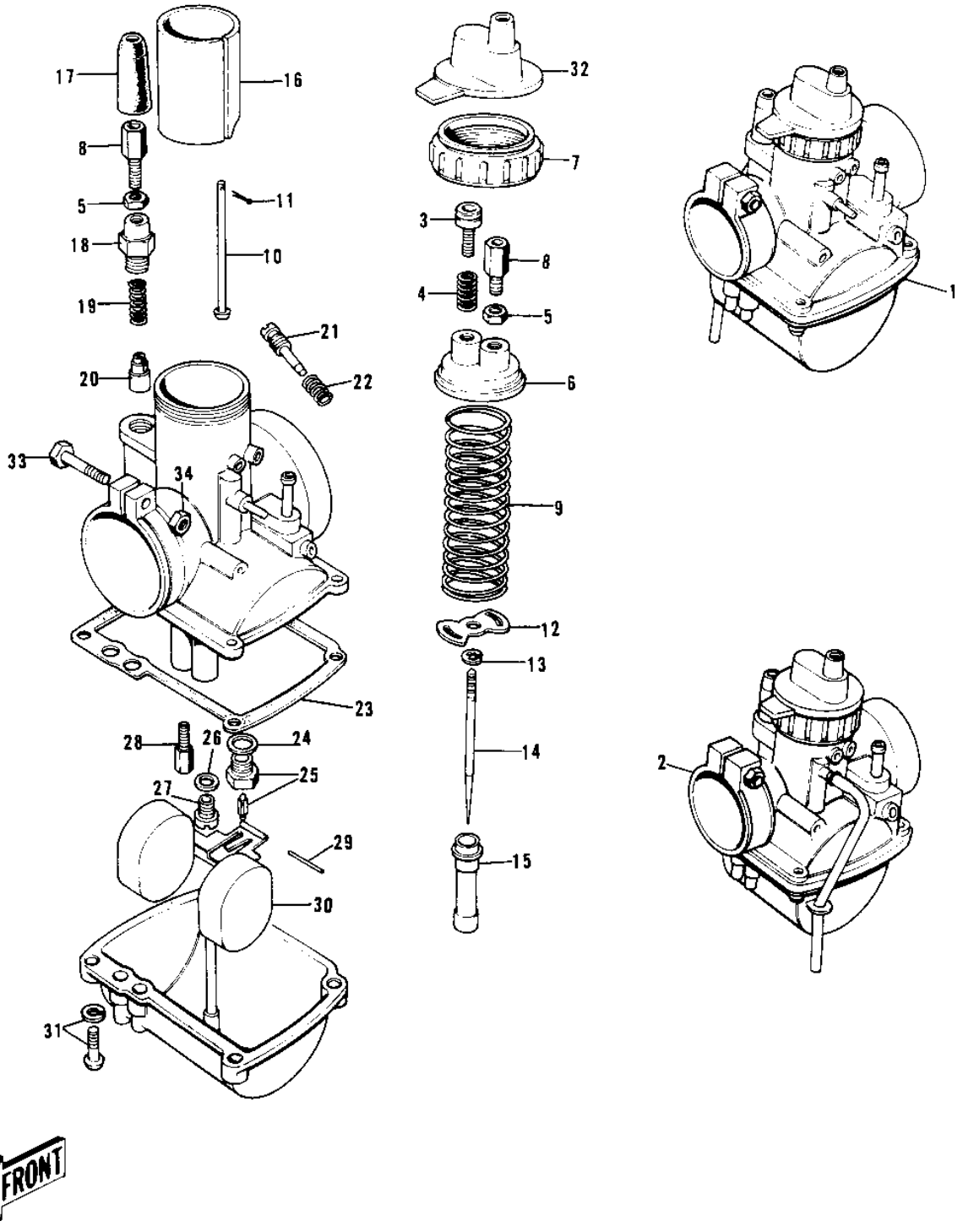

© 2026 Kawasaki Motors Corp., U.S.A.

1974 Mach I

PARTS LIST

CARBURETORS

Kawasaki
Let the Good Times Roll®

ITEM NAME	PART NUMBER	QUANTITY
CARBURETOR ASSY,L.H (Ref # 1)	16001-177	
CARBURETOR ASSY,L.H (Ref # 1)	16001-235	
CARBURETOR ASY,RH&CNT (Ref # 2)	16001-178	
CARBURETOR ASY,R.H&CN (Ref # 2)	16001-236	
SCREW,THROTTLE ADJSTR (Ref # 3)	16021-016	
SPRING THR STOP SCREW (Ref # 4)	16022-005	
NUT CABLE ADJUST LOCK (Ref # 5)	16003-004	
TOP MIXING CHAMBER (Ref # 6)	16005-005	
CAP,MIXING CHAMBER (Ref # 7)	16004-019	
CABLE ADJUSTER (Ref # 8)	16002-002	
SPRING,THROTTLE VALVE (Ref # 9)	16006-019	
ROD,THROTTLE VLV STP (Ref # 10)	16024-012	
PIN COTTER 1.2X10 (Ref # 11)	550D1210	
SPRING SEAT THRTL VLV (Ref # 12)	16007-002	
CIRCLIP (Ref # 13)	16008-010	
JET NEEDLE 4EJ9 (Ref # 14)	16009-057	
NEEDLE JET,O-2 (Ref # 15)	16017-066	
VALVE,THROTTLE CA.2.5 (Ref # 16)	16025-054	
CAP CABLE ADJUST RUBB (Ref # 17)	16036-005	
CAP STARTER PLUNGER (Ref # 18)	16012-004	
SPRING-PLUNGER (Ref # 19)	16013-003	
PLUNGER-ENRICHNER (Ref # 20)	16016-002	
SCREW (Ref # 21)	16014-006	
SPRING-THR STOP SCREW (Ref # 22)	16022-007	
GASKET FLOAT CHAMBER (Ref # 23)	16019-012	
WASHER VALVE SEAT (Ref # 24)	16029-002	
FLOAT VALVE ASSY (Ref # 25)	16030-001	
WASHER MAIN JET (Ref # 26)	16034-001	
MAIN JET NO 75R (Ref # 27)	92063-109	

© 2026 Kawasaki Motors Corp., U.S.A.

1974 Mach I

PARTS LIST

CARBURETORS

ITEM NAME	PART NUMBER	QUANTITY
MAIN JET,#70R (Ref # 27)	92063-1012	
MAIN JET NO 72.5R (Ref # 27)	92063-108	
MAIN JET,#77.5R (Ref # 27)	92063-1032	
MAIN JET, #A80 (Ref # 27)	92063-1030	
JET-PILOT NO 20 (Ref # 28)	92064-021	
FLOAT PIN (Ref # 29)	16032-003	
FLOAT (Ref # 30)	16031-015	
SCREW-FLOAT CHAMBER (Ref # 31)	16033-012	
SCREW-FLOAT CHAMBER (Ref # 32)	16033-012	
BOOT,CARBURETOR (Ref # 32)	49006-1021	
SCREW CLAMP (Ref # 33)	16010-004	
NUT 6MM (Ref # 34)	311B0600	

© 2026 Kawasaki Motors Corp., U.S.A.