1978 KE250-B2

PARTS DIAGRAM

SEAT/CHAIN COVER

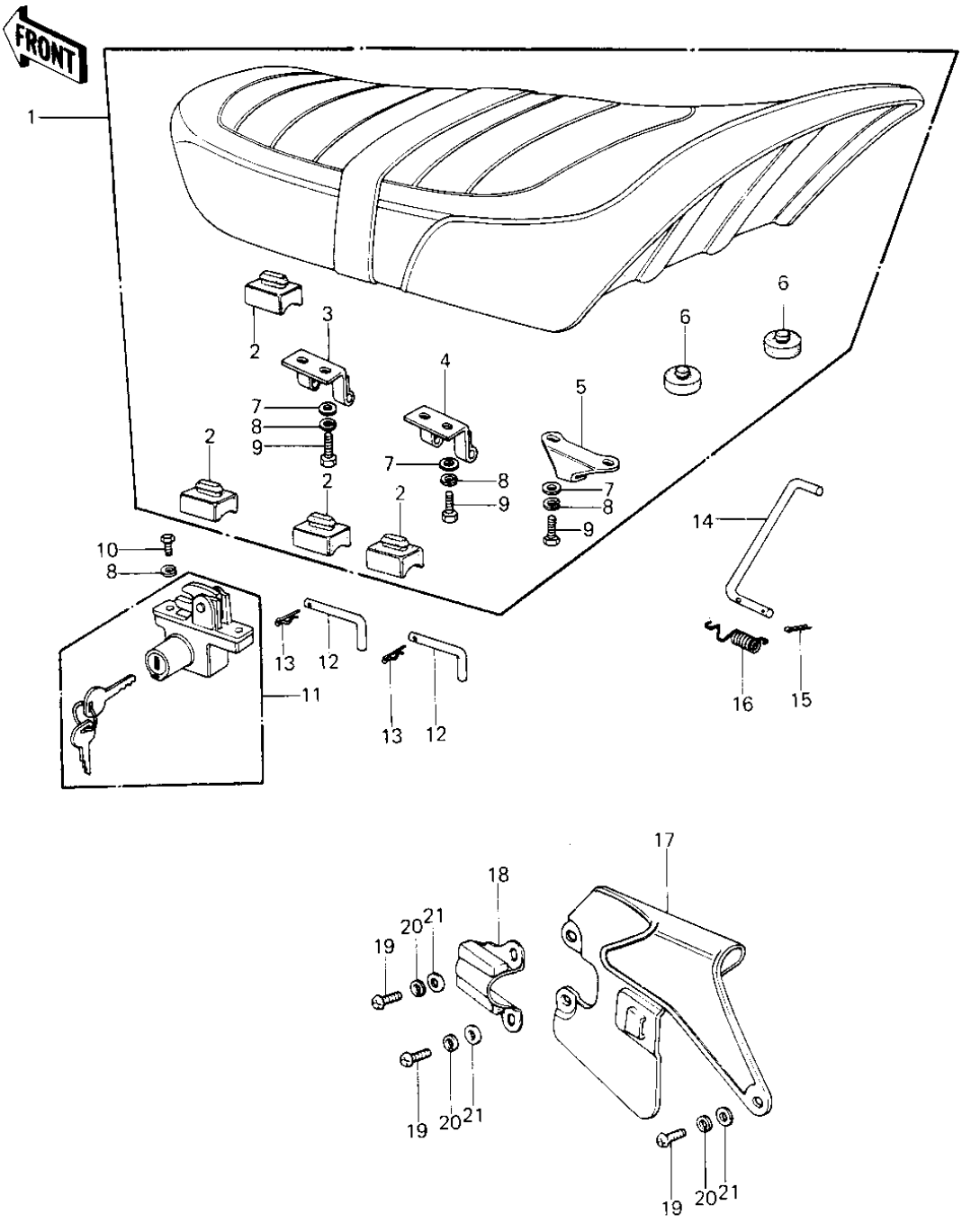

© 2026 Kawasaki Motors Corp., U.S.A.

1978 KE250-B2

PARTS LIST

SEAT/CHAIN COVER

ITEM NAME	PART NUMBER	QUANTITY
SEAT ASSY,DUAL (Ref # 1)	53002-1013	
SEAT ASSY,DUAL (Ref # 1)	53002-1013	
DAMPER RUBBER,SEAT (Ref # 2)	92075-216	
HINGE,BLACK (Ref # 3)	53009-017-10	
HINGE B (Ref # 4)	53009-018	
HOOK,SEAT (Ref # 5)	53008-035	
DAMPER RUBB DUAL SEAT (Ref # 6)	92075-023	
DAMPER,SEAT,11M/M (Ref # 6)	92075-1043	
WASHER PLAIN 6MM (Ref # 7)	411B0600	
WASHER, SPRING, 6MM (Ref # 8)	461F0600	
BOLT-UPSET 6X14 (Ref # 9)	112B0614	
BOLT-UPSET,6X16 (Ref # 10)	112G0616	
LOCK ASSY,SEAT (Ref # 11)	27016-5024	
PIN,DUAL SEAT PIVOT (Ref # 12)	92043-1007	
COTTER PIN (Ref # 13)	92041-003	
STAND,SEAT (Ref # 14)	53054-009	
PIN COTTER 2.0X15 (Ref # 15)	550D2015	
SPRING,SEAT HOOK (Ref # 16)	53055-001	
CASE-CHAIN (Ref # 17)	36014-067	
GUARD,CHAIN (Ref # 18)	55020-1003	
SCREW PAN HEAD 6X16 (Ref # 19)	220B0616	
WASHER SPRING 6MM (Ref # 20)	461F0600	
WASHER PLAIN 6MM (Ref # 21)	411B0600	

© 2026 Kawasaki Motors Corp., U.S.A.