1973 F11

PARTS DIAGRAM

FUEL TANK/SEAT

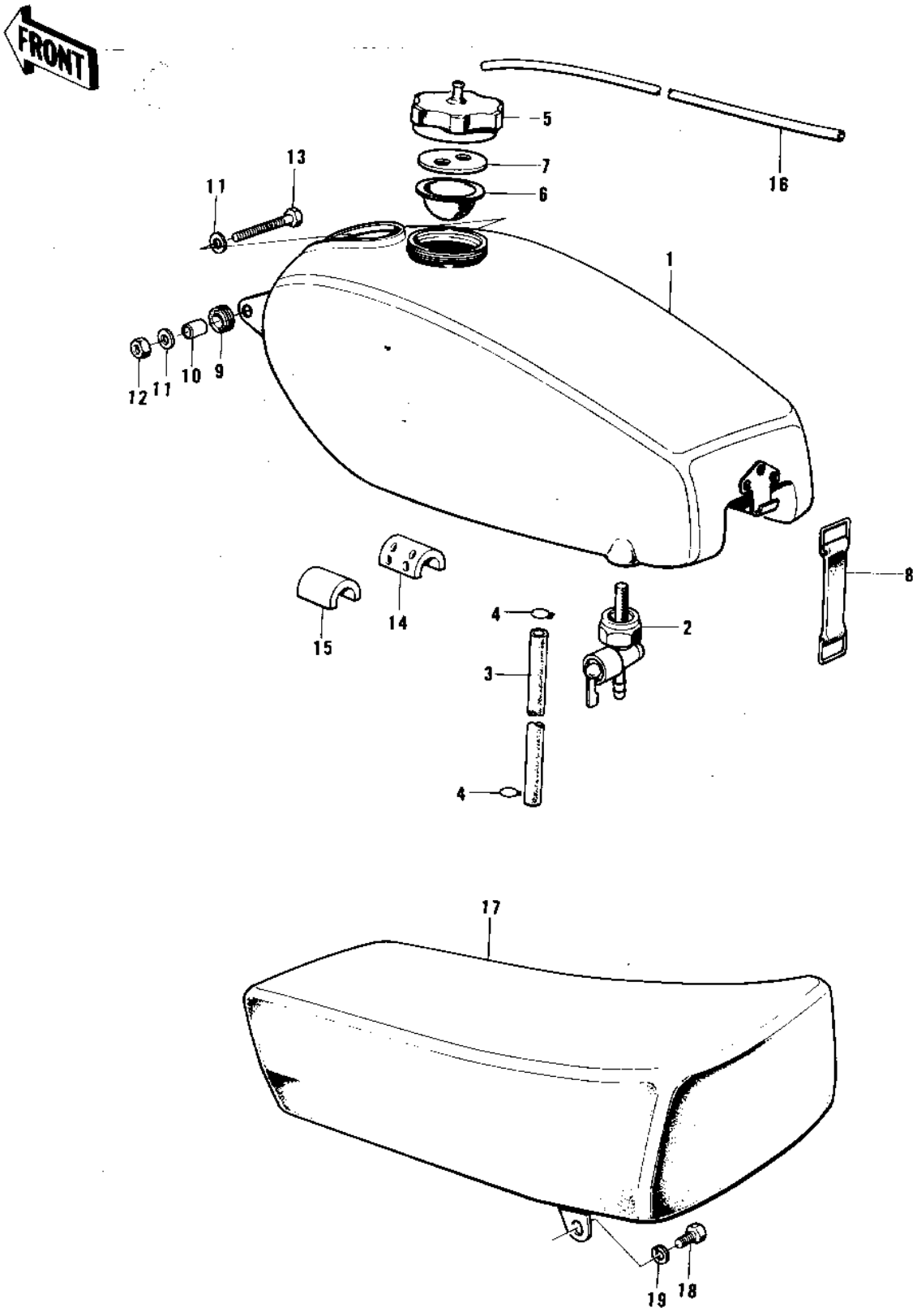

© 2026 Kawasaki Motors Corp., U.S.A.

1973 F11

PARTS LIST

FUEL TANK/SEAT

ITEM NAME	PART NUMBER	QUANTITY
TANK,FUEL (Ref # 1)	51001-085	1
FUEL COCK ASSY (Ref # 2)	51023-033	1
PIPE-FUEL (Ref # 3)	92059-080	1
CLAMP FUEL PIPE (Ref # 4)	92037-010	2
CAP,FUEL TANK (Ref # 5)	51049-021	1
GASKET,FUEL TANK CAP (Ref # 6)	51059-010	1
WASHER (Ref # 7)	51058-003	1
BAND-FUEL TANK (Ref # 8)	92072-036	1
DAMPER RUBBER (Ref # 9)	92075-197	2
COLLAR 6.8X10X14.5 (Ref # 10)	92027-156	2
WASHER 6.5X20X1.6T (Ref # 11)	92022-125	4
NUT,6MM (Ref # 12)	92019-019	1
BOLT,HEX HEAD,6X99 (Ref # 13)	92003-111	1
DAMPER RUBBER (Ref # 14)	92075-198	1
MAT FUEL TANK (Ref # 15)	51067-002	1
TUBE-VINYL,5X280 (Ref # 16)	700Q05280	1
UNAVAILABLE IN PRICE BOOK (Ref # 17)	53002-050	1
BOLT-SMALL-UPSET,8X1 (Ref # 18)	115G0816	2
BOLT HEX HEAD 8X16 (Ref # 18)	116B0816	AL
WASHER SPRING 8MM (Ref # 19)	461F0800	2

© 2026 Kawasaki Motors Corp., U.S.A.