1973 F11

PARTS DIAGRAM

FRONT FORK ('73 F11M)

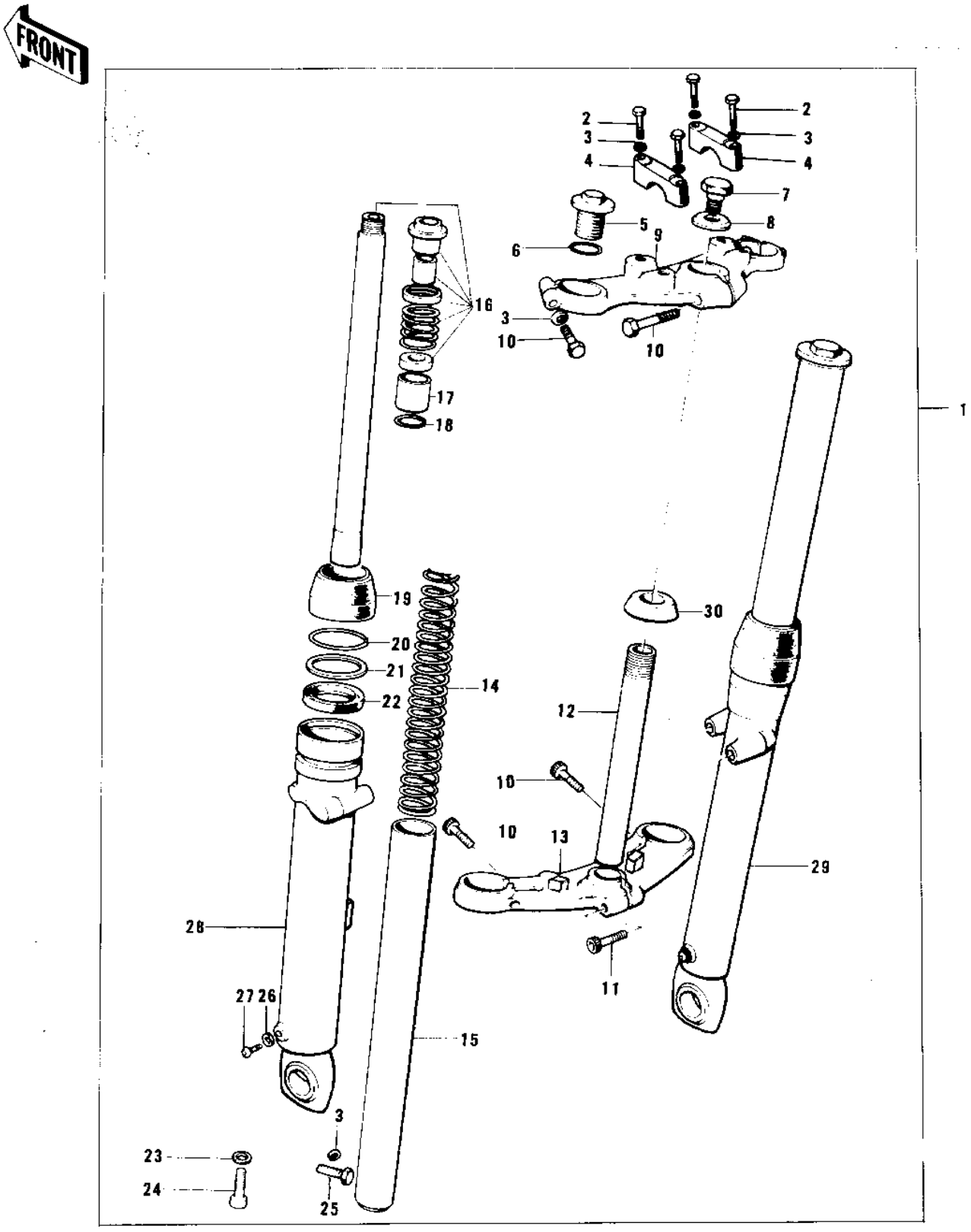

© 2026 Kawasaki Motors Corp., U.S.A.

1973 F11

PARTS LIST

FRONT FORK ('73 F11M)

ITEM NAME	PART NUMBER	QUANTITY
UNAVAILABLE IN PRICE BOOK (Ref # 1)	44001-119	1
BOLT (Ref # 2)	44041-061	4
WASHER SPRING 8MM (Ref # 3)	461F0800	3
HOLDER (Ref # 4)	46012-011	2
BOLT (Ref # 5)	44041-063	2
'O' RING FORK TOP (Ref # 6)	44046-015	2
BOLT (Ref # 7)	44041-059	3
UNAVAILABLE IN PRICE BOOK (Ref # 8)	44043-062	1
HEAD,STEERING STEM (Ref # 9)	44039-057	1
BOLT (Ref # 10)	44041-061	7
BOLT-STEERING STEM (Ref # 11)	44041-043	1
SHAFT (Ref # 12)	44052-005	1
STEM,STEERING (Ref # 13)	44038-006	1
SPRING,FORK (Ref # 14)	44026-049	2
TUBE,FORK INNER (Ref # 15)	44013-043	2
CYLINDER-FORK (Ref # 16)	44022-014	2
PISTON (Ref # 17)	44018-006	2
CIRCLIP FORK PISTON (Ref # 18)	44044-008	2
DUST SHIELD (Ref # 19)	44010-023	2
RING-SNAP,FORK OIL (Ref # 20)	92033-1100	2
WASHER-OIL SEAL FIT (Ref # 21)	44043-044	2
OIL SEAL (Ref # 22)	44009-016	2
GASKET,FORK CYLINDER (Ref # 23)	44045-057	2
BOLT-FORK CYLINDER (Ref # 24)	44041-040	2
BOLT (Ref # 25)	44041-060	1
GASKET (Ref # 26)	44045-045	2
SCREW (Ref # 27)	44041-062	2
TUBE,LH,FORK OUTER (Ref # 28)	44005-050	1
TUBE,RH,FORK OUTER (Ref # 29)	44006-048	1

© 2026 Kawasaki Motors Corp., U.S.A.