1971 Bison

PARTS DIAGRAM

FENDERS (F8-A)

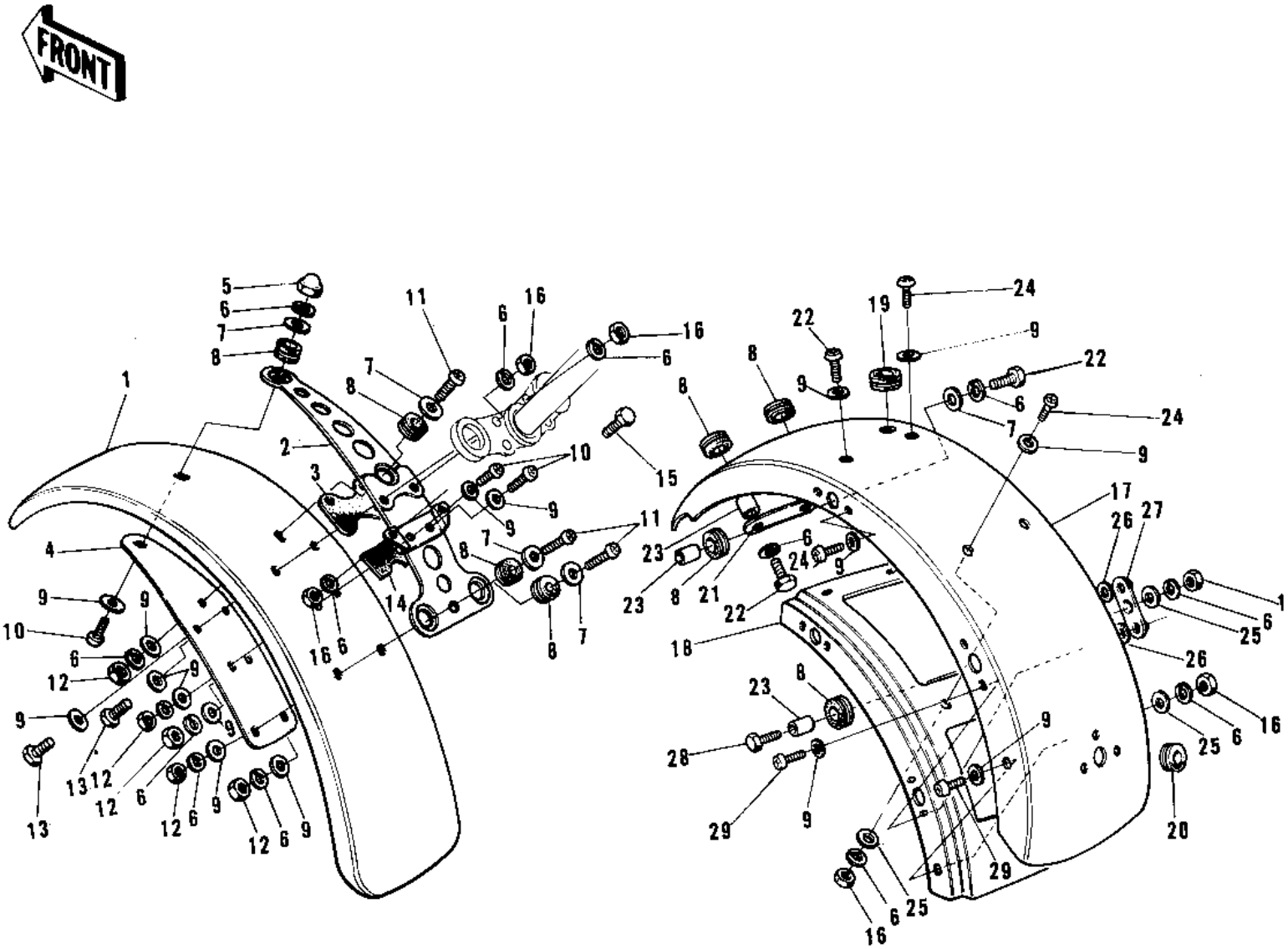

© 2026 Kawasaki Motors Corp., U.S.A.

1971 Bison

PARTS LIST

FENDERS (F8-A)

Kawasaki
Let the Good Times Roll®

ITEM NAME	PART NUMBER	QUANTITY
FENDER-FR,B.ORANGE (Ref # 1)	35004-048-72	1
BRACKET-FRONT FENDER (Ref # 2)	35012-011	1
DAMPER RUBBER-F.FENDR (Ref # 3)	35007-002	1
PLATE-FRNT FENDER FIT (Ref # 4)	35013-009	1
NUT,6MM (Ref # 5)	92015-009	1
WASHER SPRING 6MM (Ref # 6)	461F0600	30
WASHER 6.5X20X1.6T (Ref # 7)	92022-125	6
DAMPER RUBBER (Ref # 8)	92075-051	10
WASHER PLAIN (Ref # 9)	92022-024	28
SCREW PAN HEAD 6X20 (Ref # 10)	220B0620	3
SCREW PAN HEAD 6X20 (Ref # 11)	220E0620	3
NUT 6MM (Ref # 12)	312B0600	5
BOLT-HEX HEAD,6X42 (Ref # 13)	92003-063	2
DAMPER RUBBER-FR FNDR (Ref # 14)	35007-003	1
BOLT-UPSET (Ref # 15)	112G0625	2
BOLT-UPSET (Ref # 15)	112G0625	AL
NUT 6MM (Ref # 16)	311B0600	14
FENDER-RR,B.ORANGE (Ref # 17)	35022-046-72	1
BRACE-REAR FENDER (Ref # 18)	35034-010	1
GROMMET HARNESS 10MM (Ref # 19)	92071-010	1
GROMMET HARNESS 10MM (Ref # 20)	92071-019	1
BRACE-RR FENDER,FRONT (Ref # 21)	35034-013	1
BOLT-UPSET,6X20 (Ref # 22)	112G0620	4
BOLT-UPSET,6X20 (Ref # 22)	112G0620	AL
COLLAR (Ref # 23)	92027-103	6
SCREW PAN HEAD 6X14 (Ref # 24)	220B0614	8
WASHER PLAIN 6MM (Ref # 25)	411B0600	10
DAMPER RUBBER (Ref # 26)	92075-097	8
WASHER-PLAIN (Ref # 27)	92022-200	4

© 2026 Kawasaki Motors Corp., U.S.A.