1980 KDX175

PARTS DIAGRAM

HEADLIGHT ('80 A1)

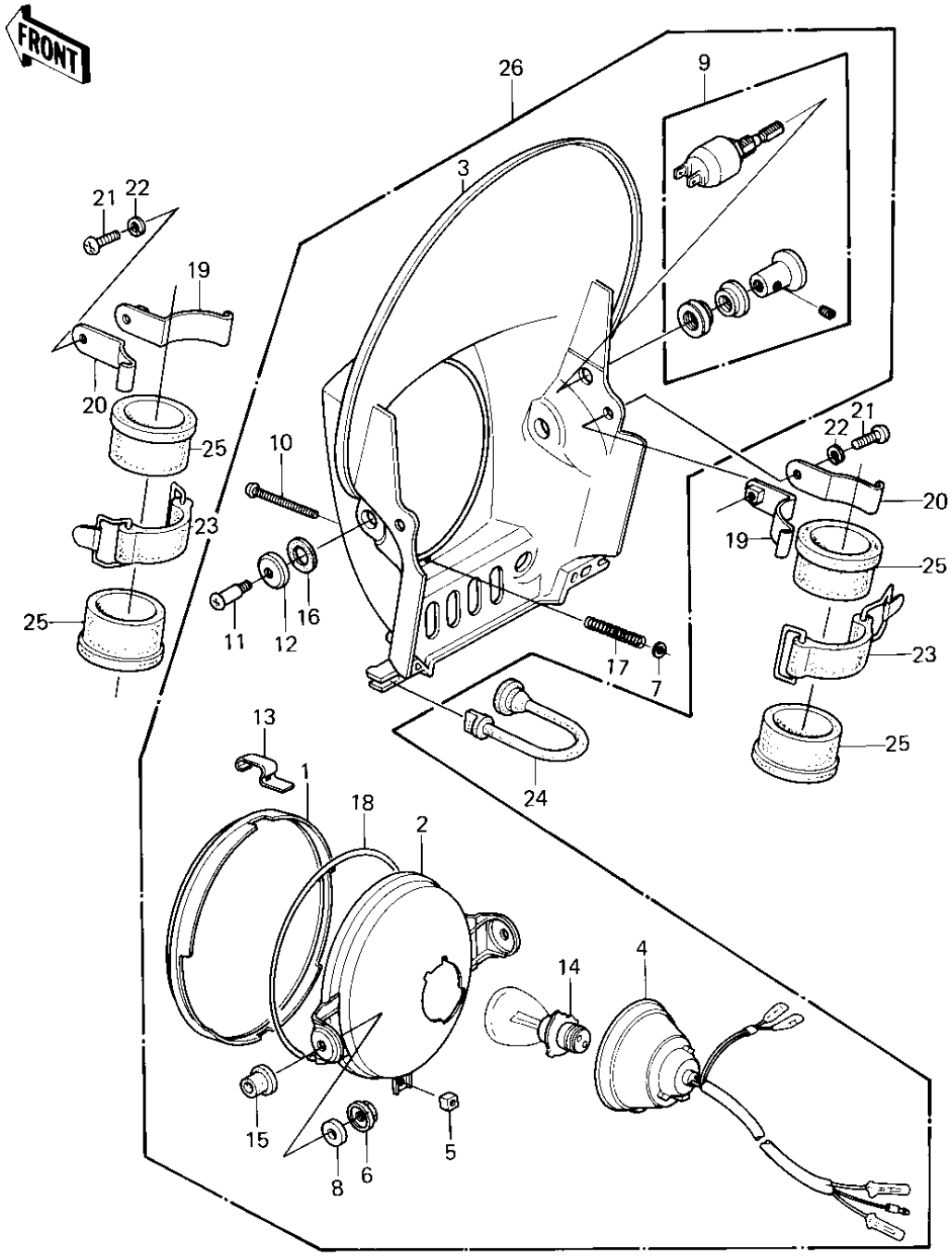

© 2026 Kawasaki Motors Corp., U.S.A.

1980 KDX175

PARTS LIST

HEADLIGHT ('80 A1)

ITEM NAME	PART NUMBER	QUANTITY
COVER,HEAD LAMP (Ref # 1)	14025-4002	1
LAMP,HEAD (Ref # 2)	23004-4001	1
BODY-COMP-HEAD LAMP, (Ref # 3)	23005-5002-7F	1
SOCKET,HEAD LAMP (Ref # 4)	23008-4001	1
NUT,4MM (Ref # 5)	23020-018	1
NUT,HEAD LAMP RIM FI (Ref # 6)	23020-023	2
WASHER (Ref # 7)	23021-004	1
WASHER-PLAIN,5MM (Ref # 8)	23021-012	2
SWITCH,HEAD LAMP (Ref # 9)	27004-4001	1
SCREW,ADJUSTING,4X43 (Ref # 10)	92009-4002	1
SCREW,HEAD LAMP (Ref # 11)	92009-4003	2
WASHER,HEAD LAMP (Ref # 12)	92022-4005	2
CLAMP,HEAD LAMP (Ref # 13)	92037-4001	3
BULB,6V 35/25W (Ref # 14)	92069-4001	1
DAMPER,HEAD LAMP (Ref # 15)	92075-4009	2
DAMPER,HEAD LAMP (Ref # 16)	92075-4010	2
SPRING,FOCUS ADJUSTN (Ref # 17)	92081-4003	1
SEAL,HEAD LAMP (Ref # 18)	92093-4001	1
BRACKET,HEAD LMP PFI (Ref # 19)	11034-1688	2
BRACKET,HEAD LMP FIT (Ref # 20)	11034-1693	2
SCREW PAN HEAD 6X16 (Ref # 21)	220B0616	2
WASHER SPRING 6MM (Ref # 22)	461F0600	2
BAND,FUEL TANK (Ref # 23)	92072-076	2
BAND,HEAD LAMP (Ref # 24)	92072-077	2
DAMPER,HEAD LMP FITT (Ref # 25)	92075-1236	4
HEAD LAMP ASSY (Ref # 26)	23001-4001	1

© 2026 Kawasaki Motors Corp., U.S.A.