1980 KDX175

PARTS DIAGRAM

BRAKE PEDAL/TORQUE LINK ('80 A1)

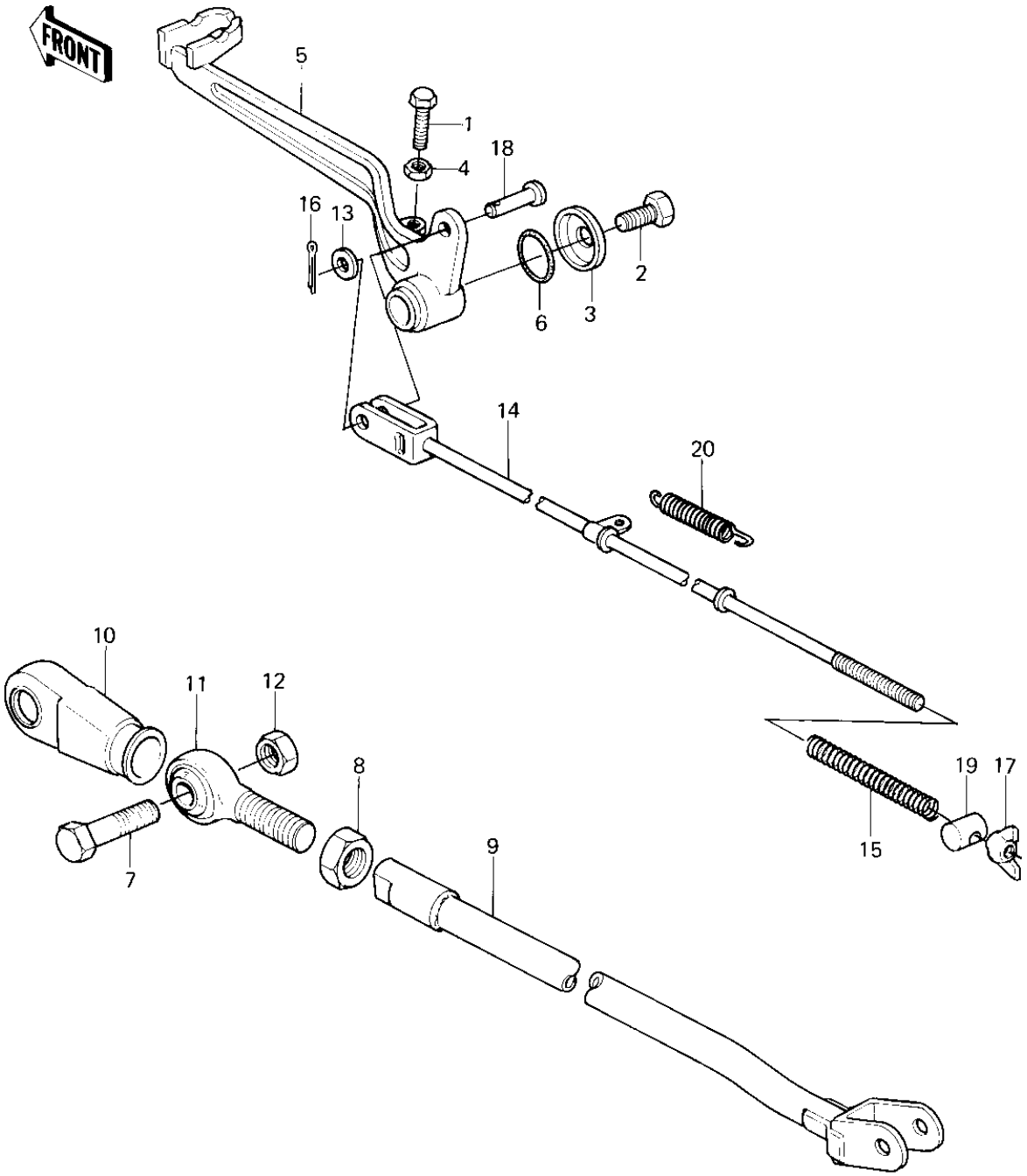

© 2026 Kawasaki Motors Corp., U.S.A.

1980 KDX175

PARTS LIST

BRAKE PEDAL/TORQUE LINK ('80 A1)

ITEM NAME	PART NUMBER	QUANTITY
BOLT-UPSET (Ref # 1)	112G0625	1
BOLT SMALL (Ref # 2)	114G0812	1
CAP,BRAKE PEDAL FITT (Ref # 3)	11012-1116	1
NUT 6MM (Ref # 4)	311B0600	1
PEDAL,BRAKE (Ref # 5)	43001-1043	1
"0" RING,18MM (Ref # 6)	670B2018	1
BOLT,HEX HEAD,12X35 (Ref # 7)	113P1235A	1
NUT-HEX-FINE,12MM (Ref # 8)	315B1200	1
TORQUE LINK,RR BRAKE (Ref # 9)	43007-1018	1
BOOT,BALL JOINT (Ref # 10)	49006-1035	1
JOINT,BALL,TORQUE RN (Ref # 11)	59266-1003	1
NUT-LOCK,12MM (Ref # 12)	92019-009	1
WASHER PLAIN 6MM (Ref # 13)	410B0600	1
ROD,BRAKE (Ref # 14)	43011-1019	1
SPRING,BRAKE ROD (Ref # 15)	43012-001	1
PIN COTTER 2.0X15 (Ref # 16)	550D2015	1
NUT,WING,6M/M (Ref # 17)	92015-4004	1
PIN-BRAKE ROD FITTIN (Ref # 18)	92043-064	1
PIN,BRAKE (Ref # 19)	92043-1024	1
SPRING RETURN (Ref # 20)	92081-1059	1

© 2026 Kawasaki Motors Corp., U.S.A.