1980 KDX175

PARTS DIAGRAM

CRANKCASE ('80 A1)

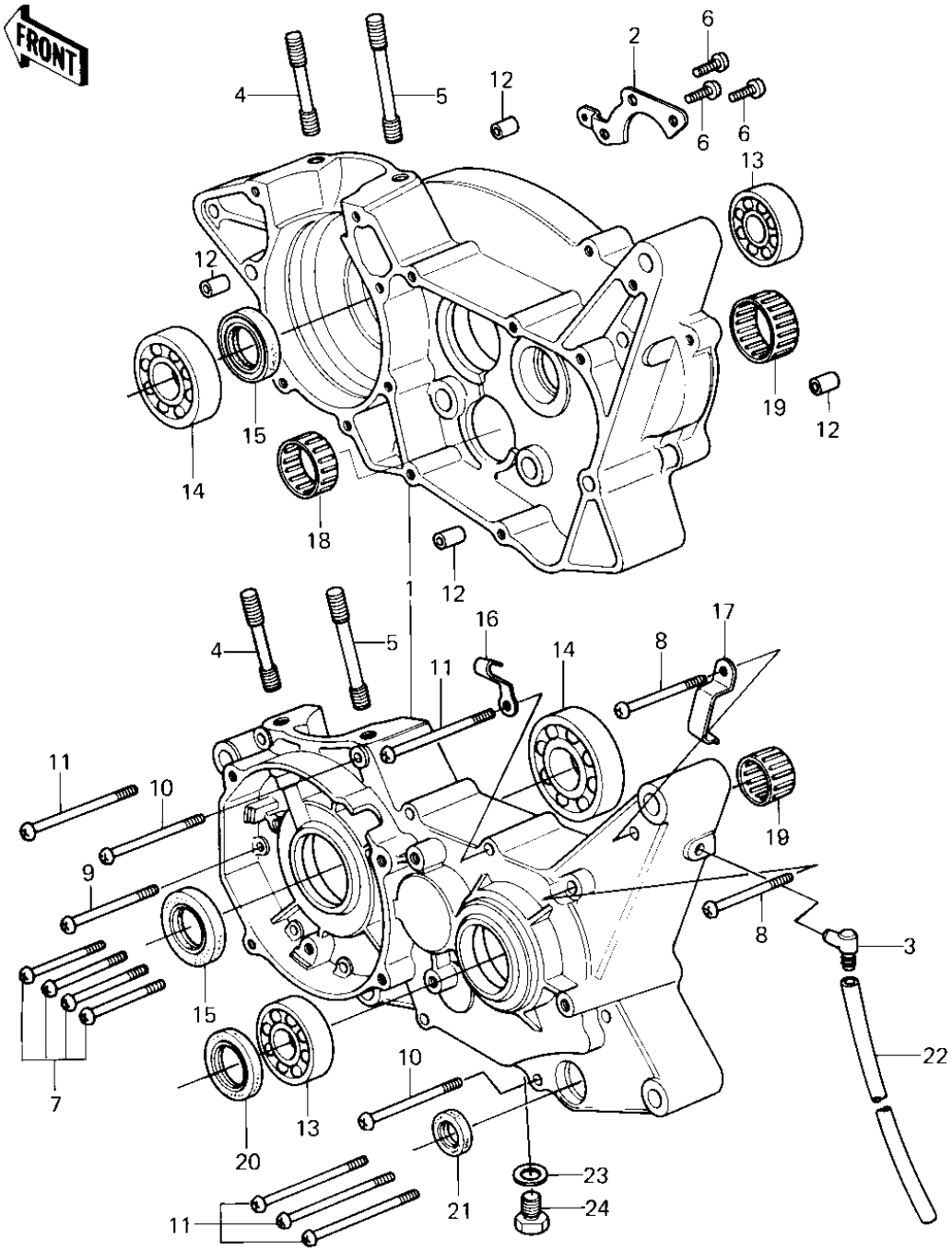

© 2026 Kawasaki Motors Corp., U.S.A.

1980 KDX175

PARTS LIST

CRANKCASE ('80 A1)

Kawasaki
Let the Good Times Roll®

ITEM NAME	PART NUMBER	QUANTITY
CRANKCASE SET (Ref # 1)	14001-5047	1
PLATE,POSITIONING (Ref # 2)	14014-1003	1
BREATHER (Ref # 3)	14069-003	1
STUD,8X25 (Ref # 4)	92004-1008	2
STUD,8X55 (Ref # 5)	172G0855	2
SCREW PAN HEAD 6X16 (Ref # 6)	220B0616	3
SCREW PAN HEAD 6X45 (Ref # 7)	220B0645	4
SCREW PAN HEAD 6X50 (Ref # 8)	220B0650	2
SCREW PAN HEAD 6X55 (Ref # 9)	220B0655	1
SCREW PAN HEAD 6X60 (Ref # 10)	220B0660	2
SCREW PAN HEAD 6X70 (Ref # 11)	220B0670	5
PIN,DOWEL,10X8.2X14 (Ref # 12)	92043-1037	4
BEARING BALL #6204 (Ref # 13)	601B6204	2
BEARING BALL #6305 (Ref # 14)	601B6305	2
SEAL-OIL (Ref # 15)	92049-1250	2
CLAMP CABLE (Ref # 15)	92037-016	1
CLAMP (Ref # 17)	92037-1073	1
BEARING,NEEDLE (Ref # 18)	92046-043	1
BEARING,NEEDLE (Ref # 19)	92046-1007	2
OIL SEAL SC25376 (Ref # 20)	92050-013	1
OIL SEAL,TB13225.5 (Ref # 21)	92051-005	1
PIPE-BREATHER (Ref # 22)	92059-061	1
GASKET CHECK VALVE (Ref # 23)	92065-058	1
PLUG OIL DRAIN (Ref # 24)	92067-001	1

© 2026 Kawasaki Motors Corp., U.S.A.