1975 F7-D

PARTS DIAGRAM

OWNER TOOLS/SPECIAL SERVICE TOOLS

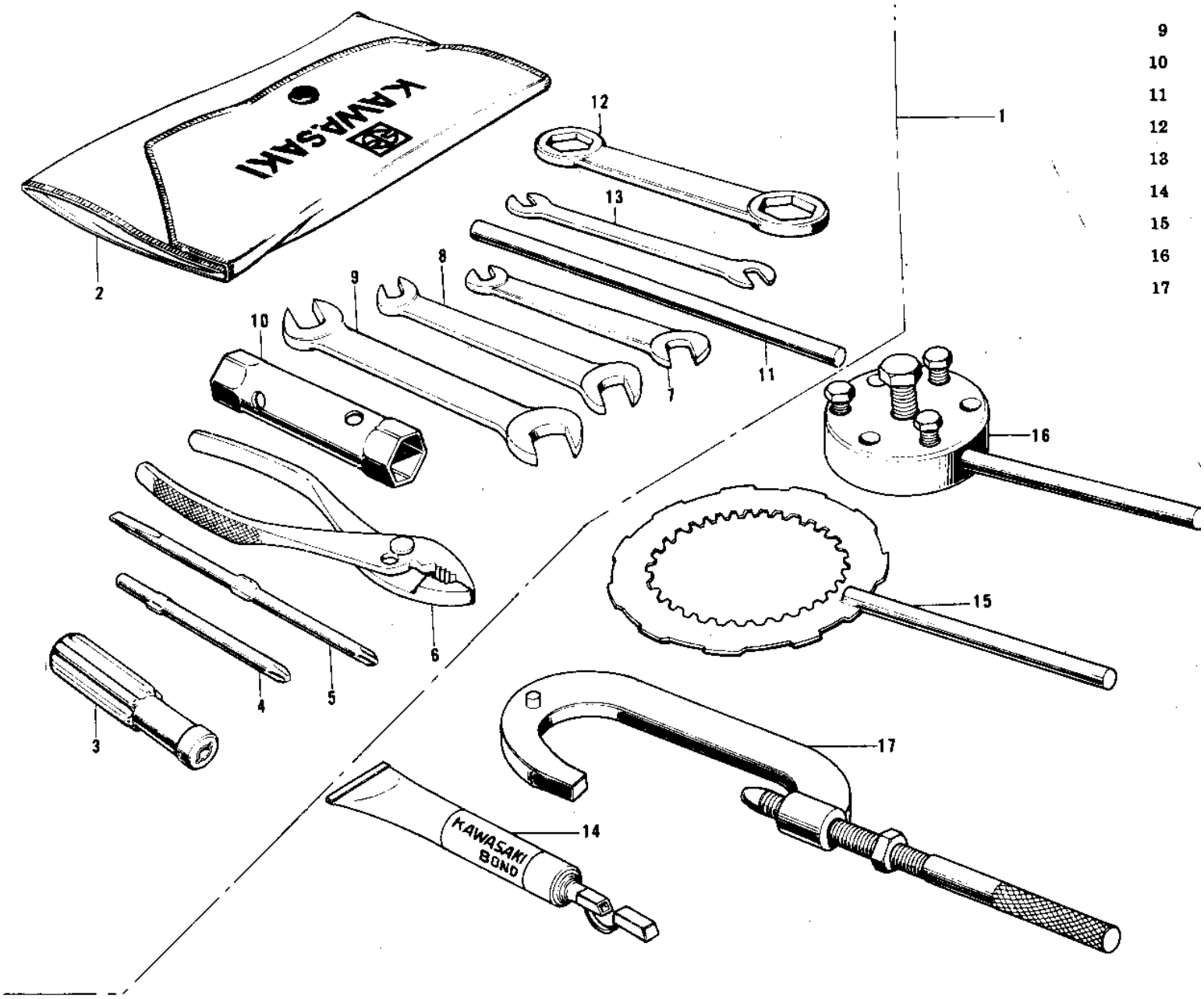

© 2026 Kawasaki Motors Corp., U.S.A.

1975 F7-D

PARTS LIST

OWNER TOOLS/SPECIAL SERVICE TOOLS

Kawasaki
Let the Good Times Roll®

ITEM NAME	PART NUMBER	QUANTITY
56007-048 (Canada) (Ref # 1)	56007-041	
BAG,TOOL (Ref # 2)	56008-008	
92106-1001 (Canada) (Ref # 3)	92106-002	
SCREW DRIVER #3 PHLIP (Ref # 4)	92107-005	
TOOL-DRIVER (Ref # 5)	92107-1052	
92112-003 (Canada) (Ref # 6)	92112-005	
WRENCH,OPEN,8X10 (Ref # 7)	92126-001	
WRENCH,OPEN END,12X13 (Ref # 8)	92126-002	
TOOL-WRENCH,OPEN END, (Ref # 9)	92110-1153	
WRENCH,BOX,17X21 (Ref # 10)	92110-012	
BAR,SPARK PLUG WRENCH (Ref # 11)	92111-005	
92110-1022 (Canada) (Ref # 12)	92108-009	
TIGHTENER,SPOKE (Ref # 13)	92108-011	
LIQUID GASKET (Ref # 14)	92104-002	
57001-1243 (Canada) (Ref # 15)	56019-100	
UNAVAILABLE IN PRICE BOOK (Ref # 16)	56019-068	
57001-1243 (Canada) (Ref # 17)	56019-040	

© 2026 Kawasaki Motors Corp., U.S.A.