1972 F7-A

PARTS DIAGRAM

CHASSIS ELECTRICAL EQUIPMENT

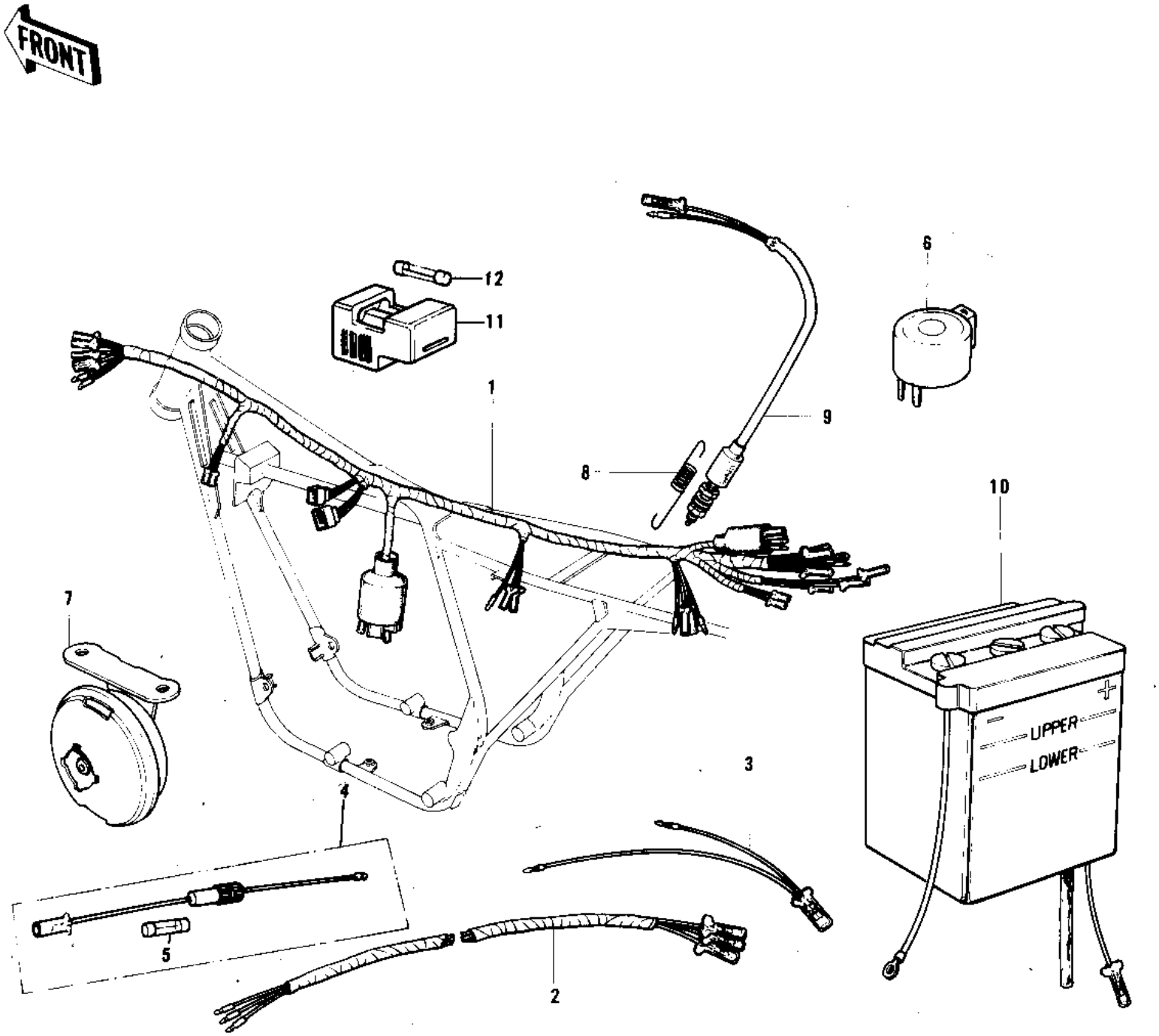

© 2026 Kawasaki Motors Corp., U.S.A.

1972 F7-A

PARTS LIST

CHASSIS ELECTRICAL EQUIPMENT

ITEM NAME	PART NUMBER	QUANTITY
WIRING HARNESS-MAIN (Ref # 1)	26001-076	
WIRING HARNESS-REAR (Ref # 2)	26002-029	
LEAD WIRE (Ref # 3)	26011-042	
FUSE ASSY (Ref # 4)	26004-017	
FUSE 10A (Ref # 5)	26006-003	
RELAY-TURN SIGNAL (Ref # 6)	27002-013	
HORN (Ref # 7)	27003-061	
SPRING BRAKE LAMP SW (Ref # 8)	27011-004	
SWITCH-BRAKE LAMP (Ref # 9)	27010-018	
YUA BAT 6N4-2A-5 (Ref # 10)	K26012-020	
HOLDER,SPARE FUSE (Ref # 11)	26016-003	
FUSE 10A (Ref # 12)	26006-003	

© 2026 Kawasaki Motors Corp., U.S.A.