1972 F7-A

PARTS DIAGRAM

SEAT/CHAIN COVER ('74-'75 F7-C/F6-D)

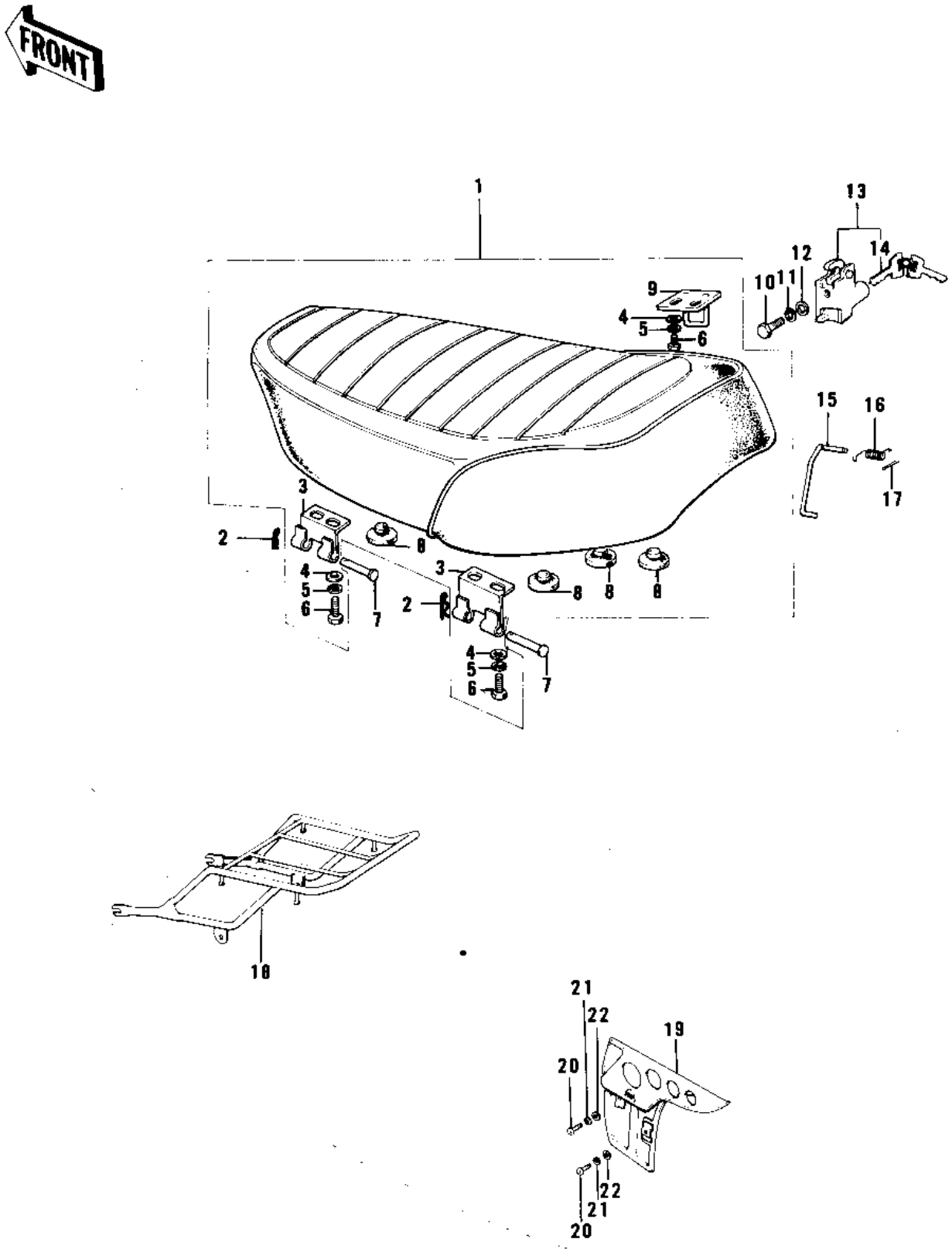

© 2026 Kawasaki Motors Corp., U.S.A.

1972 F7-A

PARTS LIST

SEAT/CHAIN COVER ('74-'75 F7-C/F6-D)

ITEM NAME	PART NUMBER	QUANTITY
SEAT ASSY, DUAL (Ref # 1)	53002-054	
COTTER PIN (Ref # 2)	92041-003	
HINGE (Ref # 3)	53009-015	
WASHER PLAIN 6MM (Ref # 4)	411B0600	
WASHER SPRING 6MM (Ref # 5)	461F0600	
BOLT-UPSET 6X14 (Ref # 6)	112B0614	
PIN (Ref # 7)	53011-002	
DAMPER RUBB DUAL SEAT (Ref # 8)	92075-023	
HOOK, SEAT (Ref # 9)	53008-021	
BOLT-UPSET,6X12 (Ref # 10)	112G0612	
WASHER SPRING 6MM (Ref # 11)	461F0600	
WASHER PLAIN 6MM (Ref # 12)	411B0600	
LOCK ASSY,SEAT (Ref # 13)	53045-014	
KEY SET,#401 (Ref # 14)	27008-063-01	
KEY SET,#402 (Ref # 14)	27008-063-02	
KEY SET,#403 (Ref # 14)	27008-063-03	
KEY SET,#404 (Ref # 14)	27008-063-04	
KEY SET,#405 (Ref # 14)	27008-063-05	
KEY SET,#406 (Ref # 14)	27008-063-06	
KEY SET,#407 (Ref # 14)	27008-063-07	
KEY SET,#408 (Ref # 14)	27008-063-08	
KEY SET,#409 (Ref # 14)	27008-063-09	
KEY SET,#410 (Ref # 14)	27008-063-10	
KEY SET,#411 (Ref # 14)	27008-063-11	
KEY SET,#412 (Ref # 14)	27008-063-12	
KEY SET,#413 (Ref # 14)	27008-063-13	
KEY SET,#414 (Ref # 14)	27008-063-14	
KEY SET,#415 (Ref # 14)	27008-063-15	
KEY SET,#416 (Ref # 14)	27008-063-16	

© 2026 Kawasaki Motors Corp., U.S.A.

1972 F7-A

PARTS LIST

SEAT/CHAIN COVER ('74-'75 F7-C/F6-D)

ITEM NAME	PART NUMBER	QUANTITY
KEY SET,#417 (Ref # 14)	27008-063-17	
KEY SET,#418 (Ref # 14)	27008-063-18	
KEY SET,#419 (Ref # 14)	27008-063-19	
KEY SET,#420 (Ref # 14)	27008-063-20	
KEY SET,#421 (Ref # 14)	27008-063-21	
KEY SET,#422 (Ref # 14)	27008-063-22	
KEY SET,#423 (Ref # 14)	27008-063-23	
KEY SET,#424 (Ref # 14)	27008-063-24	
KEY SET,#425 (Ref # 14)	27008-063-25	
KEY SET,#426 (Ref # 14)	27008-063-26	
KEY SET,#427 (Ref # 14)	27008-063-27	
KEY SET,#428 (Ref # 14)	27008-063-28	
KEY SET,#429 (Ref # 14)	27008-063-29	
KEY SET,#430 (Ref # 14)	27008-063-30	
STAND, SEAT (Ref # 15)	53054-007	
SPRING,SEAT STAND (Ref # 16)	53055-002	
PIN COTTER 2.0X15 (Ref # 17)	550D2015	
CARRIER-LUGGAGE (Ref # 18)	53029-045	
CASE-CHAIN,BLACK (Ref # 19)	36014-035-21	
SCREW PAN HEAD 6X12 (Ref # 20)	220B0612	
WASHER SPRING 6MM (Ref # 21)	461F0600	
WASHER PLAIN 6MM (Ref # 22)	411B0600	

© 2026 Kawasaki Motors Corp., U.S.A.