# 1972 F7-A

## PARTS DIAGRAM

## REAR HUB/BRAKE/CHAIN ('74-'75 F7-C/F6-D)

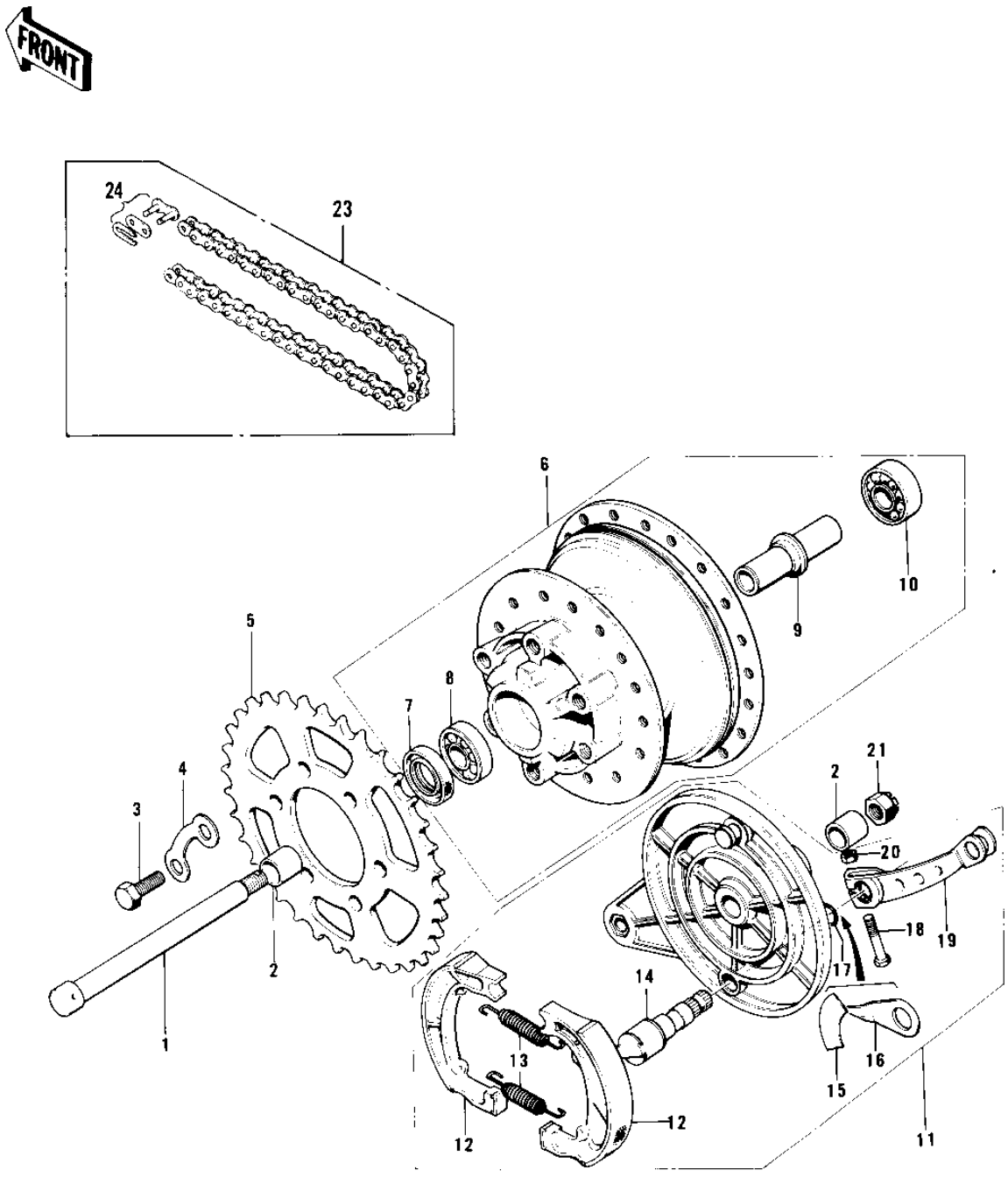


© 2026 Kawasaki Motors Corp., U.S.A.

# 1972 F7-A

## PARTS LIST

## REAR HUB/BRAKE/CHAIN ('74-'75 F7-C/F6-D)

| ITEM NAME | PART NUMBER | QUANTITY |
|---|---|---|
| AXLE-REAR (Ref # 1) | 42031-037 | |
| COLLAR-REAR AXLE (Ref # 2) | 42032-036 | |
| BOLT-HEX HEAD,10X25 (Ref # 3) | 92001-087 | |
| WASHER LOCK (Ref # 4) | 92088-007 | |
| REAR SPROCKET 50T (Ref # 5) | 42041-085 | |
| REAR SPROCKET,46T (Ref # 5) | 42041-084 | |
| DRUM ASSY-REAR BRAKE (Ref # 6) | 42005-029 | |
| DRUM ASY,RR BK,BUFF (Ref # 6) | 42005-029-80 | |
| .OIL SEAL RR BRK DRUM (Ref # 7) | 92050-009 | |
| .BEARING BALL #6302 (Ref # 8) | 601B6302 | |
| .SPACER-RR HUB BEARING (Ref # 9) | 42010-019 | |
| .BEARING BALL #6302Z (Ref # 10) | 601B6302Z | |
| PANEL-ASY,RR BRK,BUFF (Ref # 11) | 42006-039-80 | |
| .SHOE,BRAKE (Ref # 12) | 42019-010 | |
| .SHOE,BRAKE (Ref # 12) | 42019-010 | |
| .SPRING,BRAKE SHOE (Ref # 13) | 92081-1766 | |
| .SPRING,BRAKE SHOE (Ref # 14) | 92081-1550 | |
| .CAM SHAFT,REAR BRAKE (Ref # 15) | 42026-014 | |
| .CAM SHAFT,REAR BRAKE (Ref # 15) | 42026-025 | |
| .LABEL,BRAKE SHOE,RR (Ref # 16) | 41084-005 | |
| .INDICATOR,BRAKE SHOE (Ref # 17) | 41085-012 | |
| ."0" RING,11MM (Ref # 18) | 92055-004 | |
| 3BOLT-UPSET (Ref # 19) | 112G0630 | |
| .LEVER-REAR BRAKE CAM (Ref # 20) | 42029-023 | |
| .NUT,6MM (Ref # 21) | 41072-007 | |
| NUT CASTLE 14MM (Ref # 22) | 321B1400 | |
| DR CHAIN 428X114H (Ref # 23) | 92057-033 | |
| DR CHAIN 428X114H (Ref # 23) | 92057-033 | |
| JOINT-CHAIN (Ref # 24) | 92058-1015 | |

© 2026 Kawasaki Motors Corp., U.S.A.