1972 F7-A

PARTS DIAGRAM

FRONT FORK

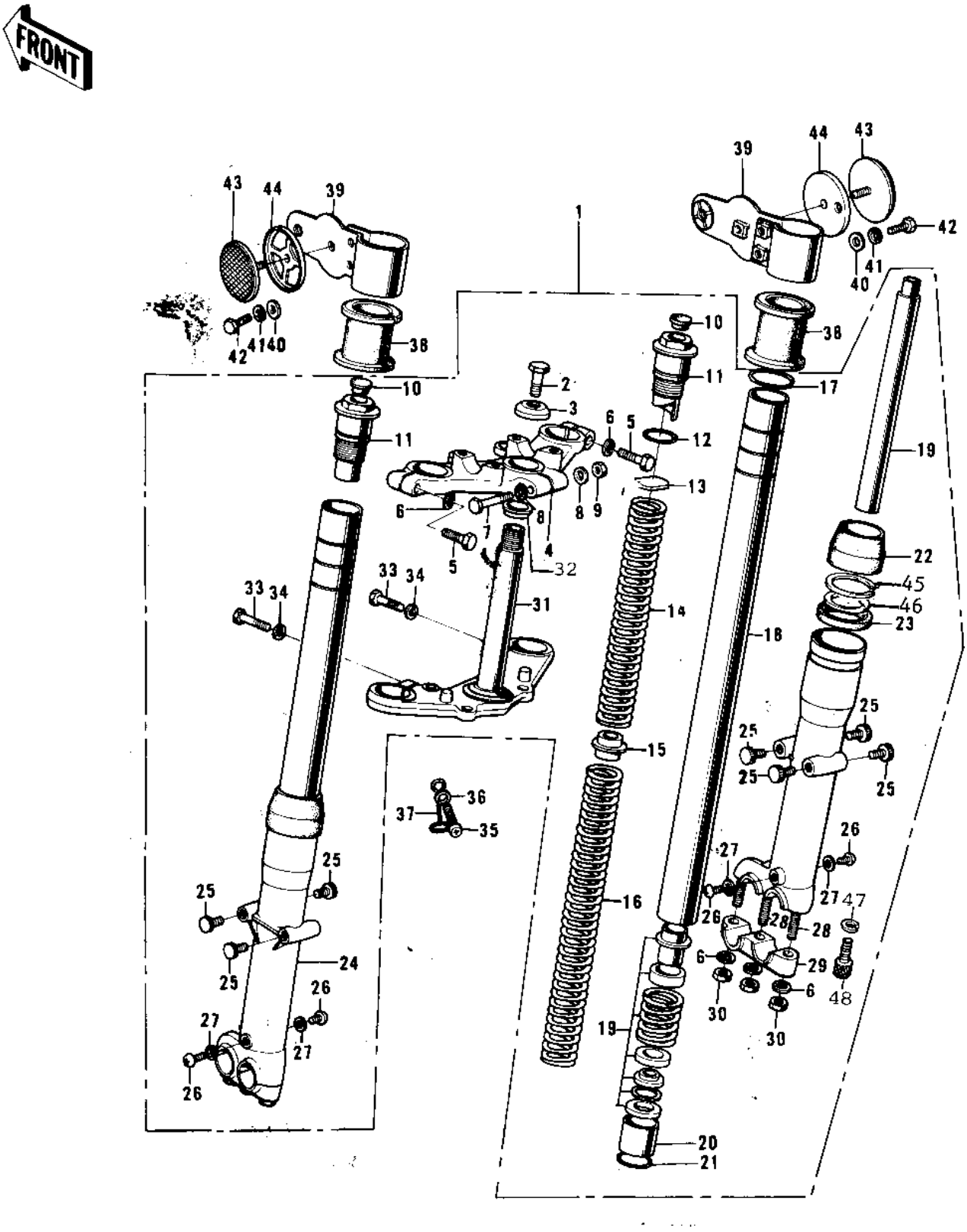

© 2026 Kawasaki Motors Corp., U.S.A.

1972 F7-A

PARTS LIST

FRONT FORK

Kawasaki
Let the Good Times Roll®

ITEM NAME	PART NUMBER	QUANTITY
FORK-FRONT (Ref # 1)	44001-102	
BOLT STRNG STEM HEAD (Ref # 2)	44041-007	
WASHER STRNG STEM HD (Ref # 3)	44043-016	
HEAD-STEERING STEM (Ref # 4)	44039-049	
BOLT-STEERING STEM HD (Ref # 5)	44041-044	
WASHER SPRING 8MM (Ref # 6)	461F0800	
BOLT-STEERING STEM HD (Ref # 7)	44041-042	
WASHER PLAIN 8MM (Ref # 8)	410B0800	
NUT,LOCK,8MM (Ref # 9)	92015-1124	
CAP-FORK TOP BOLT (Ref # 10)	44062-004	
BOLT-FORK TOP (Ref # 11)	44041-046	
'O' RING INNER TUBE (Ref # 12)	44046-014	
WASHER-FORK SPRG SEAT (Ref # 13)	44029-016	
SPRING-FORK,SHORT (Ref # 14)	44026-035	
GUIDE-FORK SPRING (Ref # 15)	44028-019	
SPRING-FORK,LONG (Ref # 16)	44026-034	
CIRCLIP (Ref # 17)	44044-011	
TUBE-FORK INNER (Ref # 18)	44013-027	
CYLINDER-FORK (Ref # 19)	44022-005	
PISTON-FORK (Ref # 20)	44018-004	
CIRCLIP (Ref # 21)	44044-010	
DUST SHIELD FORK (Ref # 22)	44010-006	
OIL SEAL (Ref # 23)	92049-1049	
TUBE,LH,FORK OUTER (Ref # 24)	44005-034-80	
CAP (Ref # 25)	44062-002	
SCREW PAN HEAD 4X8 (Ref # 26)	220B0408	
GASKET FORK DRAIN PLG (Ref # 27)	44045-002	
STUD 8X30 (Ref # 28)	172G0830	
HOLDER-FRONT AXLE (Ref # 29)	44063-002	

© 2026 Kawasaki Motors Corp., U.S.A.

1972 F7-A

PARTS LIST

FRONT FORK

ITEM NAME	PART NUMBER	QUANTITY
NUT,8MM (Ref # 30)	311B0800	
STEM-STEERING (Ref # 31)	44037-054	
CONE LOWER BEARING (Ref # 32)	92047-004	
BOLT HEX HEAD 10X32 (Ref # 33)	113B1032	
WASHER SPRING 10MM (Ref # 34)	461F1000	
BOLT,6X10 (Ref # 35)	112G0610	
WASHER PLAIN 6MM (Ref # 36)	410B0600	
CLAMP-CABLE (Ref # 37)	92037-046	
DAMPER RUBBER (Ref # 38)	92075-064	
BRACKET-HEAD LAMP,BLK (Ref # 39)	23064-011-21	
WASHER PLAIN 6MM (Ref # 40)	410B0600	
WASHER SPRING 6MM (Ref # 41)	461F0600	
BOLT-UPSET (Ref # 42)	112G0618	
REFLECTOR-REFLEX,FRNT (Ref # 43)	28012-006	
DAMPER RUBBER (Ref # 44)	92075-137	
CIRCLIP-OIL SEAL FIT (Ref # 45)	44044-014	
WASHER-OIL SEAL FIT (Ref # 46)	44043-045	
GASKET FORK CYL BOLT (Ref # 47)	44045-030	
BOLT FORK CYLINDER (Ref # 48)	44041-027	

© 2026 Kawasaki Motors Corp., U.S.A.