1972 F7-A

PARTS DIAGRAM

IGNITION/GENERATOR/RECTIFIER ('74-'75 F7

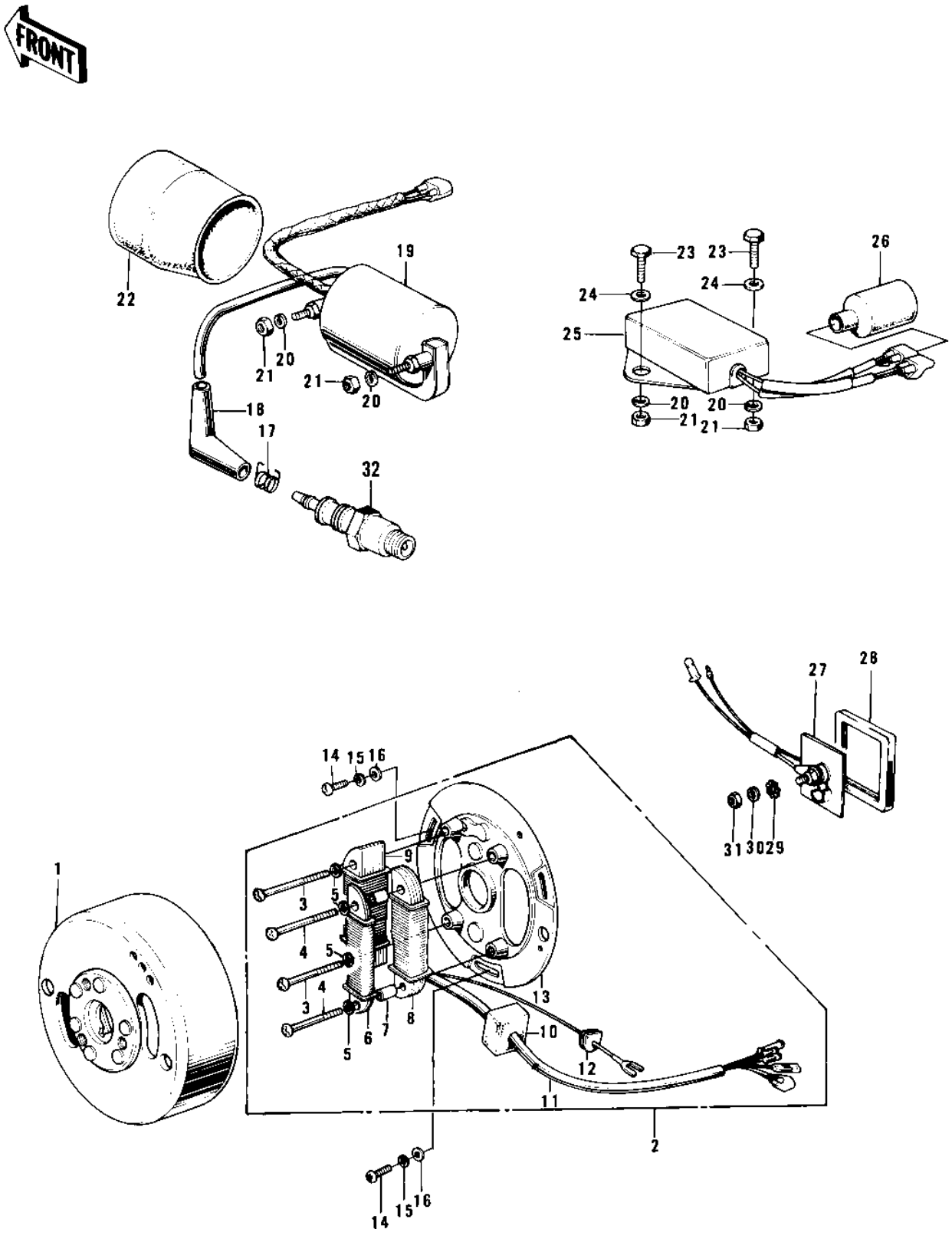

© 2026 Kawasaki Motors Corp., U.S.A.

1972 F7-A

PARTS LIST

IGNITION/GENERATOR/RECTIFIER ('74-'75 F7

ITEM NAME	PART NUMBER	QUANTITY
FLYWEEL (Ref # 1)	21050-015	
STATOR (Ref # 2)	21003-011	
.SCREW PAN HEAD 4X30 (Ref # 3)	220E0430	
SCREW PAN HEAD 4X30 (Ref # 3)	220E0430	
.SCREW-PAN HEAD,4X35 (Ref # 4)	220E0435A	
SCREW-PAN HEAD,4X35 (Ref # 4)	220E0435A	
.WASHER SPRING 4MM (Ref # 5)	461F0400	
.COIL-PULSER (Ref # 6)	21157-001	
.COLLAR (Ref # 7)	21033-002	
.COIL-PRIMARY (Ref # 8)	21049-011	
.COIL-LIGHTING (Ref # 9)	21047-012	
.GROMMET-WIRING HARN (Ref # 10)	92071-050	
.WIRING HARNESS-MAGNET (Ref # 11)	21029-020	
.GROMMET WIRING HARN C (Ref # 12)	21017-005	
.BASE-MAGNETO (Ref # 13)	21048-013	
SCREW PAN HEAD 5X20 (Ref # 14)	220B0520	
WASHER SPRING 5MM (Ref # 15)	461F0500	
WASHER PLAIN 5MM (Ref # 16)	410B0500	
SPRING-SPARK PLUG CAP (Ref # 17)	92101-001	
CAP SPARK PLUG (Ref # 18)	21130-009	
COIL-IGNITION (Ref # 19)	21121-039	
WASHER SPRING 6MM (Ref # 20)	461F0600	
NUT 6MM (Ref # 21)	311B0600	
RUBBER CAP-COIL (Ref # 22)	92073-016	
BOLT-UPSET (Ref # 23)	112G0618	
WASHER PLAIN 6MM (Ref # 24)	410B0600	
IGNITION UNIT (Ref # 25)	21119-013	
IGNITION UNIT (Ref # 25)	21119-013	
COVER WIRING HARNESS (Ref # 26)	26009-003	

© 2026 Kawasaki Motors Corp., U.S.A.

1972 F7-A

PARTS LIST

IGNITION/GENERATOR/RECTIFIER ('74-'75 F7

ITEM NAME	PART NUMBER	QUANTITY
RECTIFIER (Ref # 27)	21061-5001	
MAT-RECTIFIER (Ref # 28)	32103-020	
WASHER LOCK 5MM (Ref # 29)	464H0500	
WASHER SPRING 5MM (Ref # 30)	461F0500	
NUT,5MM (Ref # 31)	311B0500	
SPARK PLUG B9HS (Ref # 32)	B9HS	
SPARK PLUG B9HS (Ref # 32)	B9HS	
SPARK PLUG B9HS (Ref # 32)	B9HS	
SPARK PLUG B9HS (Ref # 32)	B9HS	

© 2026 Kawasaki Motors Corp., U.S.A.