1972 F7-A

PARTS DIAGRAM

OIL PUMP ('74-'75 F7-C/F6-D)

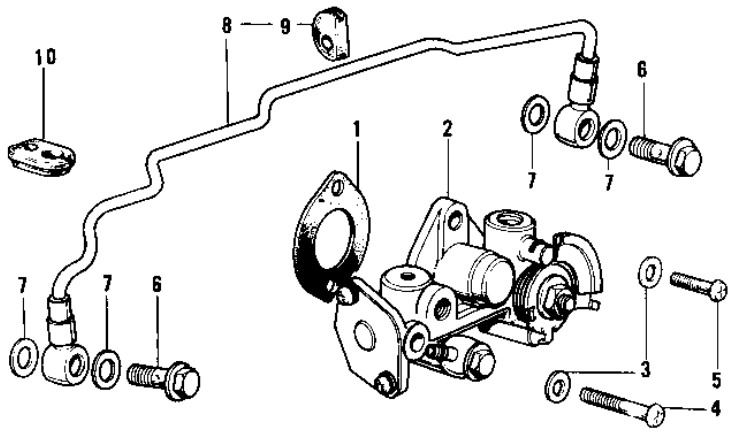

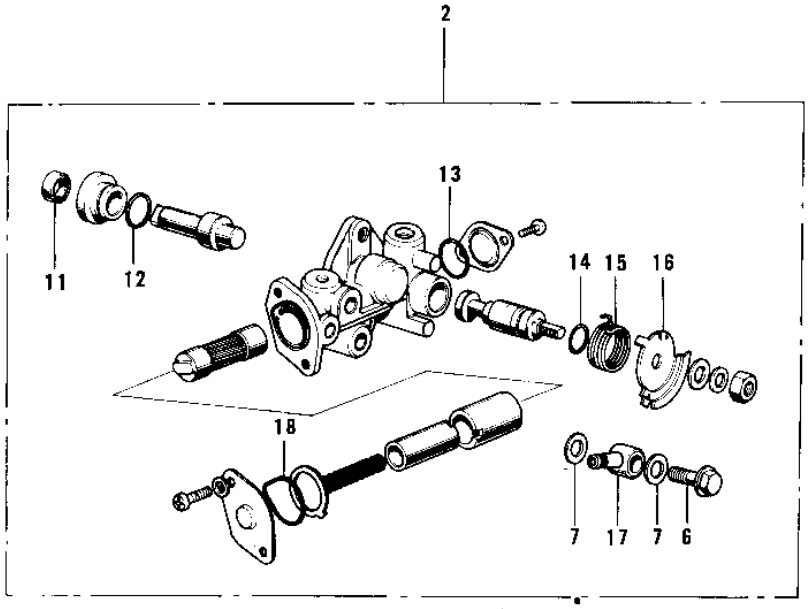

© 2026 Kawasaki Motors Corp., U.S.A.

1972 F7-A

PARTS LIST

OIL PUMP ('74-'75 F7-C/F6-D)

ITEM NAME	PART NUMBER	QUANTITY
GASKET,OIL PUMP (Ref # 1)	11060-1160	
OIL PUMP ASSY (Ref # 2)	16082-048	
WASHER OIL PUMP (Ref # 3)	92022-037	
SCREW PAN CROSS,5X28 (Ref # 4)	220B0528	
SCREW-PAN-CROS (Ref # 5)	220B0514	
BOLT-BANJO,6MM (Ref # 6)	92060-013	
WASHER OIL PUMP BANJO (Ref # 7)	92022-077	
PIPE-OIL (Ref # 8)	16134-011	
GROMMET-OIL PIPE (Ref # 9)	92071-045	
GROMMET OIL PIPE B (Ref # 10)	16135-005	
OIL SEAL OIL PUMP SHT (Ref # 11)	16091-001	
"0" RING,OIL PUMP SHT (Ref # 12)	16090-002	
"0" RING,LOWER CAP (Ref # 13)	16090-003	
SEAL-OIL,CAMSHAFT,"X" (Ref # 14)	92049-1294	
SPRING OIL PUMP LEVER (Ref # 15)	16093-004	
LEVER-OIL PUMP CABLE (Ref # 16)	16096-007	
CONNECTOR BANJO (Ref # 17)	92061-009	
"0" RING,UPPER CAP (Ref # 18)	16088-002	

© 2026 Kawasaki Motors Corp., U.S.A.