1972 F7-A

PARTS DIAGRAM

KICKSTARTER MECHANISM ('74-'75 F7-C/F6-D

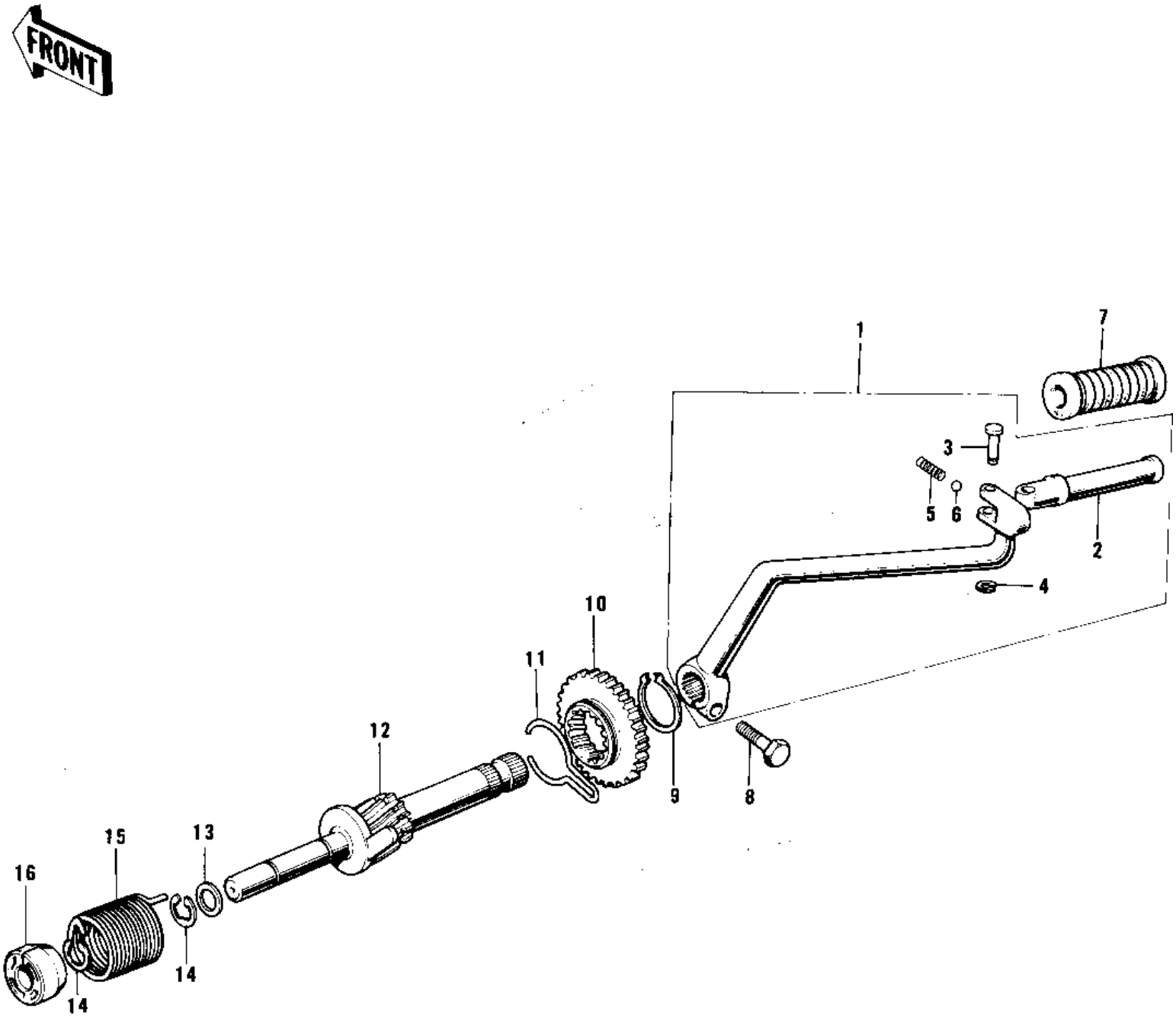

© 2026 Kawasaki Motors Corp., U.S.A.

1972 F7-A

PARTS LIST

KICKSTARTER MECHANISM ('74-'75 F7-C/F6-D

ITEM NAME	PART NUMBER	QUANTITY
PEDAL ASSY,KICK (Ref # 1)	13064-020	
LEVER-KICKSTARTER (Ref # 2)	13060-012	
PIN-KICK PEDAL (Ref # 3)	92043-088	
CIRCLIP 5MM (Ref # 4)	482K5000	
SPRING-KICK STARTER (Ref # 5)	92081-049	
BALL-STEEL,11/32" (Ref # 6)	600A1100	
RUBBER KICK PEDAL (Ref # 7)	13063-004	
BOLT-SMALL-UPSET 8X25 (Ref # 8)	115G0825	
CIRCLIP (Ref # 9)	92033-022	
GEAR-KICKSTARTER (Ref # 10)	13068-026	
HOLDER KICK GEAR (Ref # 11)	13077-002	
SHAFT ASY,KICKSTARTER (Ref # 12)	13245-004	
SHIM-KICK SHAFT,0.5T (Ref # 13)	92022-150	
CIRCLIP 10MM (Ref # 14)	482J0100	
SPRING KICKSTARTER (Ref # 15)	92082-002	
GUIDE KICK SPRING (Ref # 16)	13070-001	

© 2026 Kawasaki Motors Corp., U.S.A.