1972 F7-A

PARTS DIAGRAM

REAR HUB/BRAKE/CHAIN ('71-'73 F7/F7-A/F7

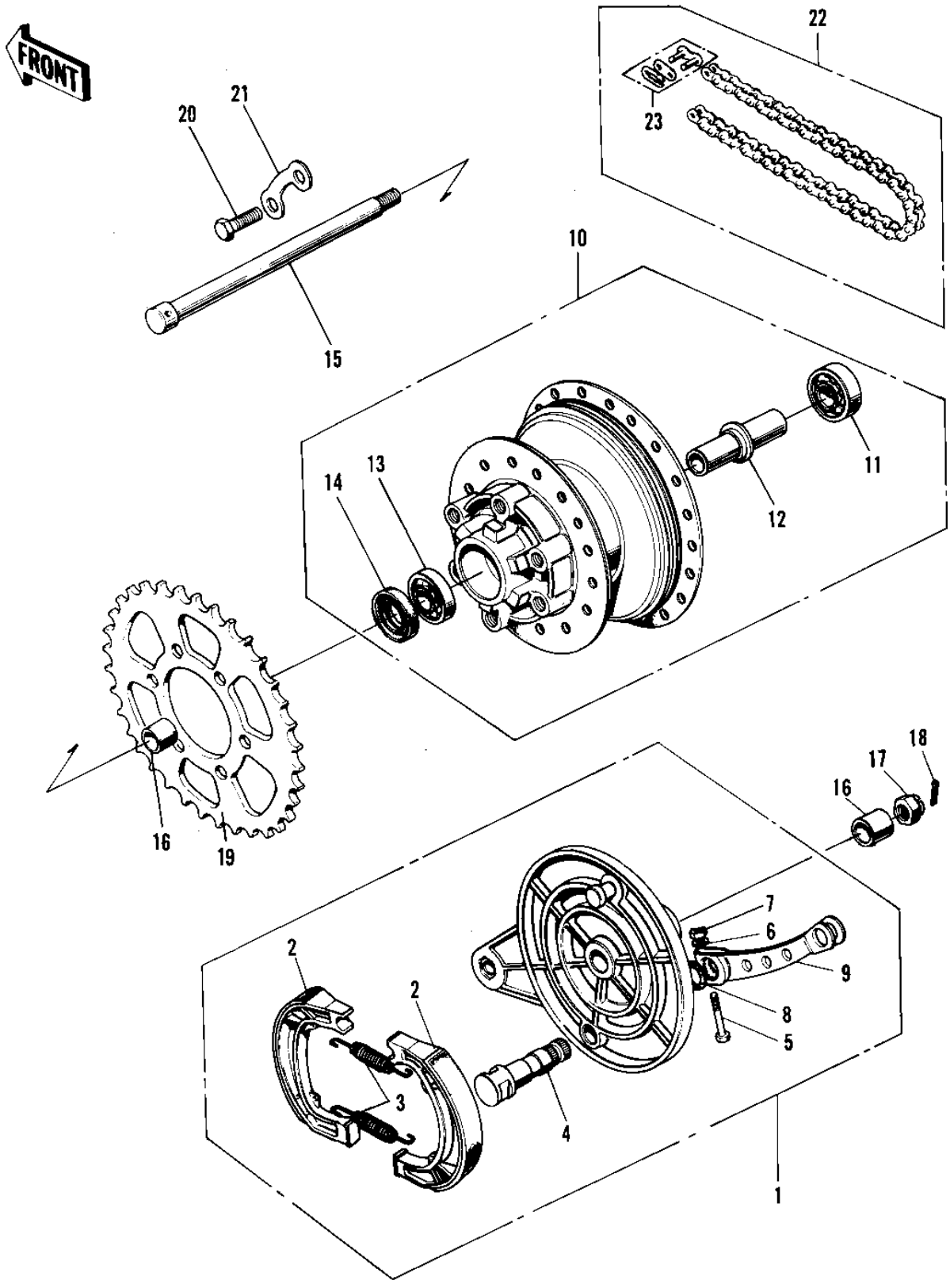

© 2026 Kawasaki Motors Corp., U.S.A.

1972 F7-A

PARTS LIST

REAR HUB/BRAKE/CHAIN ('71-'73 F7/F7-A/F7

ITEM NAME	PART NUMBER	QUANTITY
PANEL-ASY,RR BRK (Ref # 1)	42006-018	
PANEL-ASY,RR BRK,BLK (Ref # 1)	42006-028-21	
SHOE,BRAKE (Ref # 2)	41048-1007	
SHOE,BRAKE (Ref # 2)	41048-1007	
SPRING,BRAKE SHOE (Ref # 3)	92081-1766	
CAM SHAFT-FRONT BRAKE (Ref # 4)	41050-018	
CAM SHAFT-FRONT BRAKE (Ref # 4)	41050-018	
BOLT-UPSET (Ref # 5)	112G0630	
WASHER PLAIN 6MM (Ref # 6)	410B0600	
NUT 6MM (Ref # 7)	311B0600	
"0" RING,11MM (Ref # 8)	92055-004	
LEVER-REAR BRAKE CAM (Ref # 9)	42029-015	
LEVER-REAR BRAKE CAM (Ref # 9)	42029-023	
DRUM ASSY-REAR BRAKE (Ref # 10)	42005-024	
DRUM ASSY-REAR BRAKE (Ref # 10)	42005-029	
BEARING BALL #6302Z (Ref # 11)	601B6302Z	
SPACER-RR HUB BEARING (Ref # 12)	42010-019	
BEARING BALL #6302 (Ref # 13)	601B6302	
OIL SEAL RR BRK DRUM (Ref # 14)	92050-009	
AXLE-REAR (Ref # 15)	42031-037	
AXLE-REAR (Ref # 15)	42031-037	
COLLAR-REAR HUB (Ref # 16)	42032-027	
COLLAR-REAR HUB (Ref # 16)	42032-027	
COLLAR-REAR HUB (Ref # 16)	42032-027	
COLLAR-REAR AXLE (Ref # 16)	42032-036	
COLLAR-REAR AXLE (Ref # 16)	42032-036	
COLLAR-REAR AXLE (Ref # 16)	42032-036	
NUT CASTLE 14MM (Ref # 17)	321B1400	
PIN COTTER 3.0X30 (Ref # 18)	550D3030	

© 2026 Kawasaki Motors Corp., U.S.A.

1972 F7-A

PARTS LIST

REAR HUB/BRAKE/CHAIN ('71-'73 F7/F7-A/F7

ITEM NAME	PART NUMBER	QUANTITY
REAR SPROCKET 50T (Ref # 19)	42041-085	
REAR SPROCKET,46T (Ref # 19)	42041-084	
SPROCKET-REAR,55T (Ref # 19)	42041-094	
BOLT-HEX HEAD,10X25 (Ref # 20)	92001-087	
WASHER LOCK (Ref # 21)	92088-007	
UNAVAILABLE IN PRICE BOOK (Ref # 22)	695Z43114	
DR CHAIN 428X114H (Ref # 22)	92057-033	
.JOINT-CHAIN (Ref # 23)	92058-1015	

© 2026 Kawasaki Motors Corp., U.S.A.