# 1972 F7-A

## PARTS DIAGRAM

## SWING ARM/SHOCK ABSORBERS ('71-'73 F7/F7

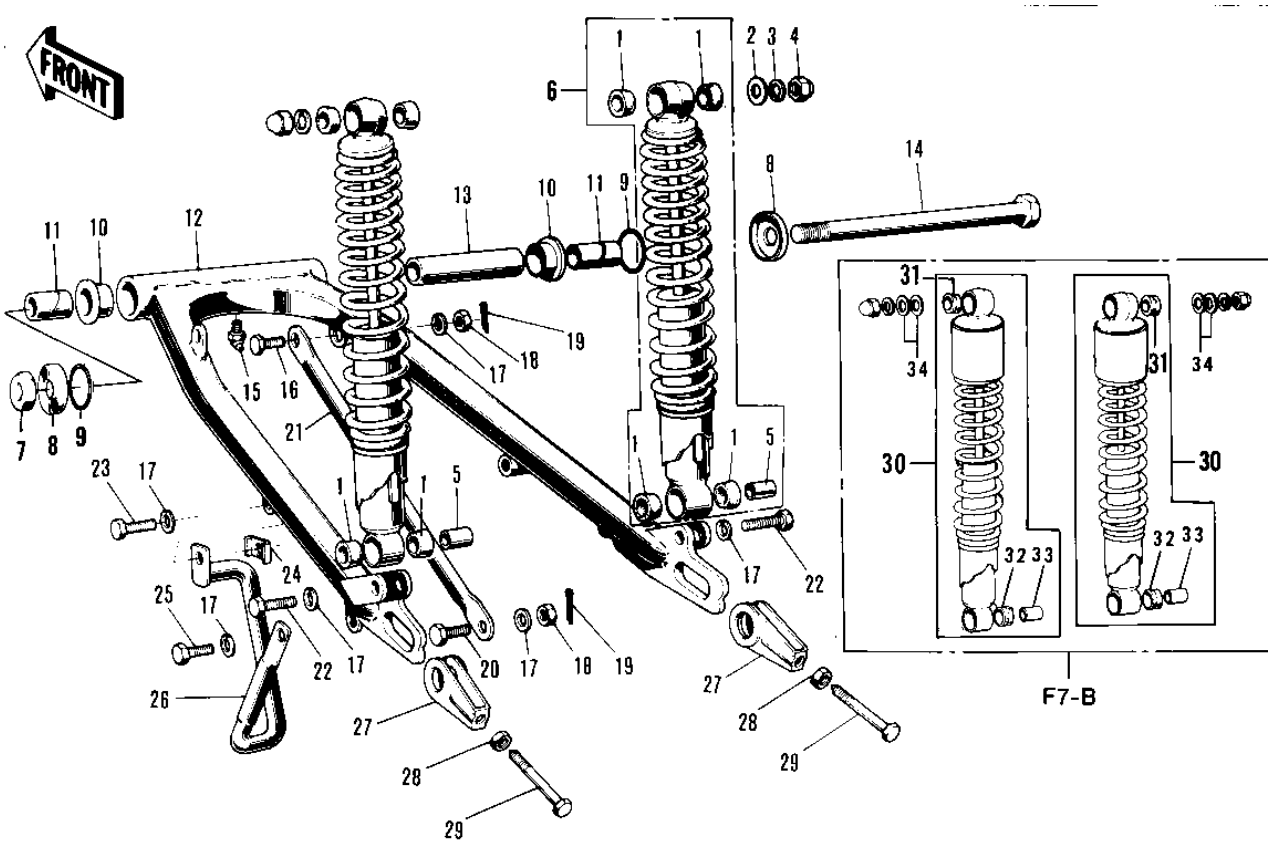


| Ref. No. 27, Chain Adjuster | | |
|---|---|---|
| | OLD | NEW |
| | 1.6 mm, 15.2 mm | 3.2 mm, 13.7 mm |
| Chain Adjuster | 33041-041 | 33041-048 |
| Collar | 42032-027 | 42032-036 |
| Frame No. | ～20779 | 20780～ |
| Interchange? | Use new parts **as a set** in place of old parts. | |

NOTE: See Rear Hub page for Collar.

83a 27

© 2026 Kawasaki Motors Corp., U.S.A.

# 1972 F7-A

## PARTS LIST

## SWING ARM/SHOCK ABSORBERS ('71-'73 F7/F7

| ITEM NAME | PART NUMBER | QUANTITY |
|---|---|---|
| BUSH SHOCK ABSORBER (Ref # 1) | 45017-003 | |
| BUSH-SHOCK ABSORBER (Ref # 1) | 45017-005 | |
| WASHER-PL-10.5X26X2.3 (Ref # 2) | 92022-044 | |
| WASHER SPRING 10MM (Ref # 3) | 461F1000 | |
| NUT SHOCK ABSORBER (Ref # 4) | 92020-003 | |
| BUSH SHCK ABS PVT SFT (Ref # 5) | 45016-003 | |
| SHOCK ABSORBER-REAR (Ref # 6) | 45014-058 | |
| SHOCK ABSBR RR (Ref # 6) | 45014-070 | |
| NUT-LOCK,12MM (Ref # 7) | 92019-009 | |
| CAP-SWINGING ARM (Ref # 8) | 33035-005 | |
| "0" RING,30MM (Ref # 9) | 671B2530 | |
| BUSHING-SWING ARM (Ref # 10) | 33033-009 | |
| SLEEVE-SWINGING ARM (Ref # 11) | 33034-016 | |
| ARM-SWING (Ref # 12) | 33001-035 | |
| COLLAR SWING ARM (Ref # 13) | 33036-002 | |
| SHAFT-SWING ARM PIVOT (Ref # 14) | 33032-029 | |
| GREASE NIPPLE (Ref # 15) | 92005-002 | |
| BOLT TORQUE LINK FIT (Ref # 16) | 92003-017 | |
| WASHER SPRING 10MM (Ref # 17) | 461F1000 | |
| NUT,10MM (Ref # 18) | 314B1000 | |
| NUT,10MM (Ref # 18) | 314B1000 | |
| PIN COTTER 2.0X15 (Ref # 19) | 550D2015 | |
| BOLT HEX HEAD 10X25 (Ref # 20) | 92003-003 | |
| TORQUE LINK REAR BRK (Ref # 21) | 43007-018 | |
| BOLT HEX HEAD 10X35 (Ref # 22) | 113N1035 | |
| BOLT,HEX HEAD,10X50 (Ref # 23) | 92001-1254 | |
| NUT-CHAIN GUARD FIT (Ref # 24) | 92017-009 | |
| BOLT,HEX HEAD,10X18 (Ref # 25) | 113G1018 | |
| GUARD-CHAIN (Ref # 26) | 55020-005 | |

© 2026 Kawasaki Motors Corp., U.S.A.

# 1972 F7-A

## PARTS LIST

## SWING ARM/SHOCK ABSORBERS ('71-'73 F7/F7

| ITEM NAME | PART NUMBER | QUANTITY |
|---|---|---|
| ADJUSTER-CHAIN (Ref # 27) | 33040-041 | |
| ADJUSTER-CHAIN (Ref # 27) | 33040-048 | |
| NUT 8MM (Ref # 28) | 312B0800 | |
| BOLT,8X50 (Ref # 29) | 92001-1399 | |
| BOLT,8X50 (Ref # 29) | 92001-1399 | |
| SHOCK ABSBR RR (Ref # 30) | 45014-075 | |
| BUSHING,SHCK ABS RUB (Ref # 31) | 45017-018 | |
| BUSHING,RUBBER (Ref # 32) | 92075-1020 | |
| BUSHING,RUBBER (Ref # 32) | 92075-1020 | |
| BUSH SHCK ABS PVT SFT (Ref # 33) | 45016-003 | |
| WASHER-PL-10.5X26X2.3 (Ref # 37) | 92022-044 | |

© 2026 Kawasaki Motors Corp., U.S.A.