1972 F7-A

PARTS DIAGRAM

CRANKCASE ('71-'73 F7/F7-A/F7-B)

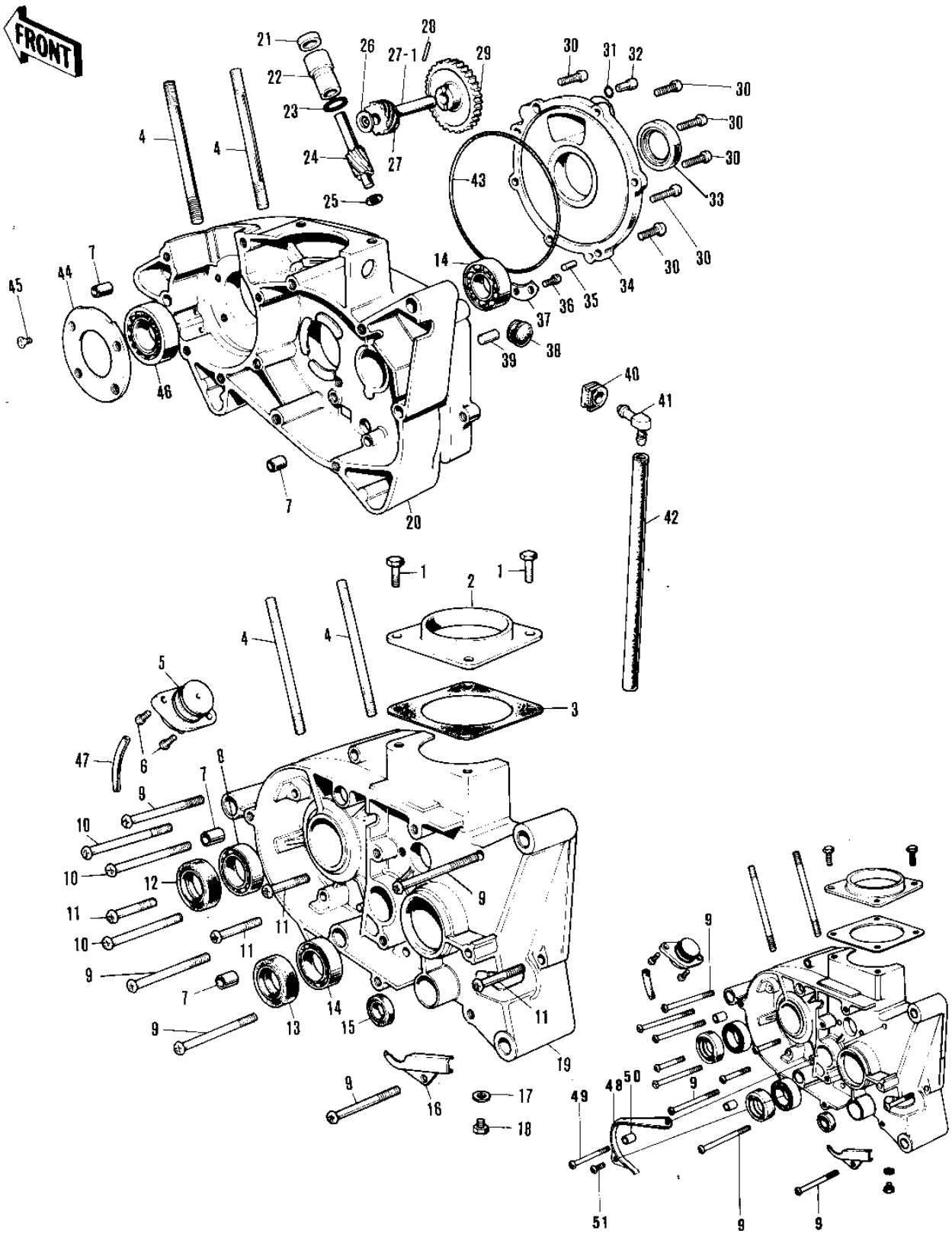

© 2026 Kawasaki Motors Corp., U.S.A.

1972 F7-A

PARTS LIST

CRANKCASE ('71-'73 F7/F7-A/F7-B)

ITEM NAME	PART NUMBER	QUANTITY
BOLT-UPSET,6X20 (Ref # 1)	112G0620	
INLET PIPE (Ref # 2)	11015-022	
GASKET-INLET PIPE (Ref # 3)	11017-006	
STUD,8X70 (Ref # 4)	172G0870	
PUMP-FUEL DRAIN (Ref # 5)	16137-002	
PUMP-FUEL DRAIN (Ref # 5)	16137-002	
SCREW PAN HEAD 6X16 (Ref # 6)	220B0616	
PIN,DOWEL,10X8.2X14 (Ref # 7)	92043-1037	
BEARING BALL #6205 (Ref # 8)	601B6205	
SCREW PAN HEAD 6X65 (Ref # 9)	220B0665	
SCREW PAN HEAD 6X65 (Ref # 9)	220B0665	
SCREW PAN HEAD 6X55 (Ref # 10)	220B0655	
SCREW PAN HEAD 6X40 (Ref # 11)	220B0640	
SEAL-OIL (Ref # 12)	92049-1250	
OIL SEAL SC30426 (Ref # 13)	92050-039	
BEARING-BALL,6204C3 (Ref # 14)	92045-1046	
OIL SEAL SB12205 (Ref # 15)	92049-004	
COVER-WIRING HARNESS (Ref # 16)	14076-002	
GASKET CHECK VALVE (Ref # 17)	92065-058	
PLUG OIL DRAIN (Ref # 18)	92067-001	
CRANKCASE,L.H (Ref # 19)	14002-078	
CRANKCASE,R.H (Ref # 20)	14003-046	
OIL SEAL (Ref # 21)	92054-004	
BUSH-TACHOMETER GEAR (Ref # 22)	92028-095	
"0" RING (Ref # 23)	92055-025	
GEAR TACHOMETER (Ref # 24)	13223-003	
WASHER THRUST (Ref # 25)	92026-026	
WASHER THRUST (Ref # 26)	92026-025	
GEAR-TACHOMETER (Ref # 27)	13224-007	

© 2026 Kawasaki Motors Corp., U.S.A.

1972 F7-A

PARTS LIST

CRANKCASE ('71-'73 F7/F7-A/F7-B)

ITEM NAME	PART NUMBER	QUANTITY
SHAFT-OIL PUMP (Ref # 27-1)	16086-002	
PIN,DOWEL (Ref # 28)	92042-035	
GEAR-OIL PUMP (Ref # 29)	16085-016	
SCREW PAN HEAD 6X20 (Ref # 30)	220B0620	
"0" RING,CHECK VALVE (Ref # 31)	92055-037	
VALVE-CHECK (Ref # 32)	16128-006	
OIL SEAL TB32457 (Ref # 33)	653B324507	
COVER-ROTARY DISC VLV (Ref # 34)	14019-046	
PIN DOWEL 5X12 (Ref # 35)	610A0512	
SCREW PAN HEAD 6X12 (Ref # 36)	220B0612	
HOLDER-MISSION BERNG (Ref # 37)	14014-022	
GROMMET PIPE (Ref # 38)	92071-038	
PIN DOWEL 8X16 (Ref # 39)	551A0816	
GROMMET (Ref # 40)	92071-042	
BREATHER ASSY (Ref # 41)	14069-1001	
PIPE-BREATHER (Ref # 42)	92059-061	
"0" RING,120MM (Ref # 43)	92055-019	
HOLDER-CRANK BEARING (Ref # 44)	14014-021	
SCREW CNTSNK HD 6X16 (Ref # 45)	221B0616	
BEARING BALL #6305 (Ref # 46)	601B6305	
PIPE FUEL OVERFLOW (Ref # 47)	92059-031	
GUIDE-CHAIN (Ref # 48)	14077-002	
SCREW PAN HEAD 6X85 (Ref # 49)	220B0685	
COLLAR (Ref # 50)	92027-169	
SCREW PAN HEAD 6X12 (Ref # 51)	220B0612	

© 2026 Kawasaki Motors Corp., U.S.A.