1972 F6-A

PARTS DIAGRAM

REAR HUB/BRAKE/CHAIN

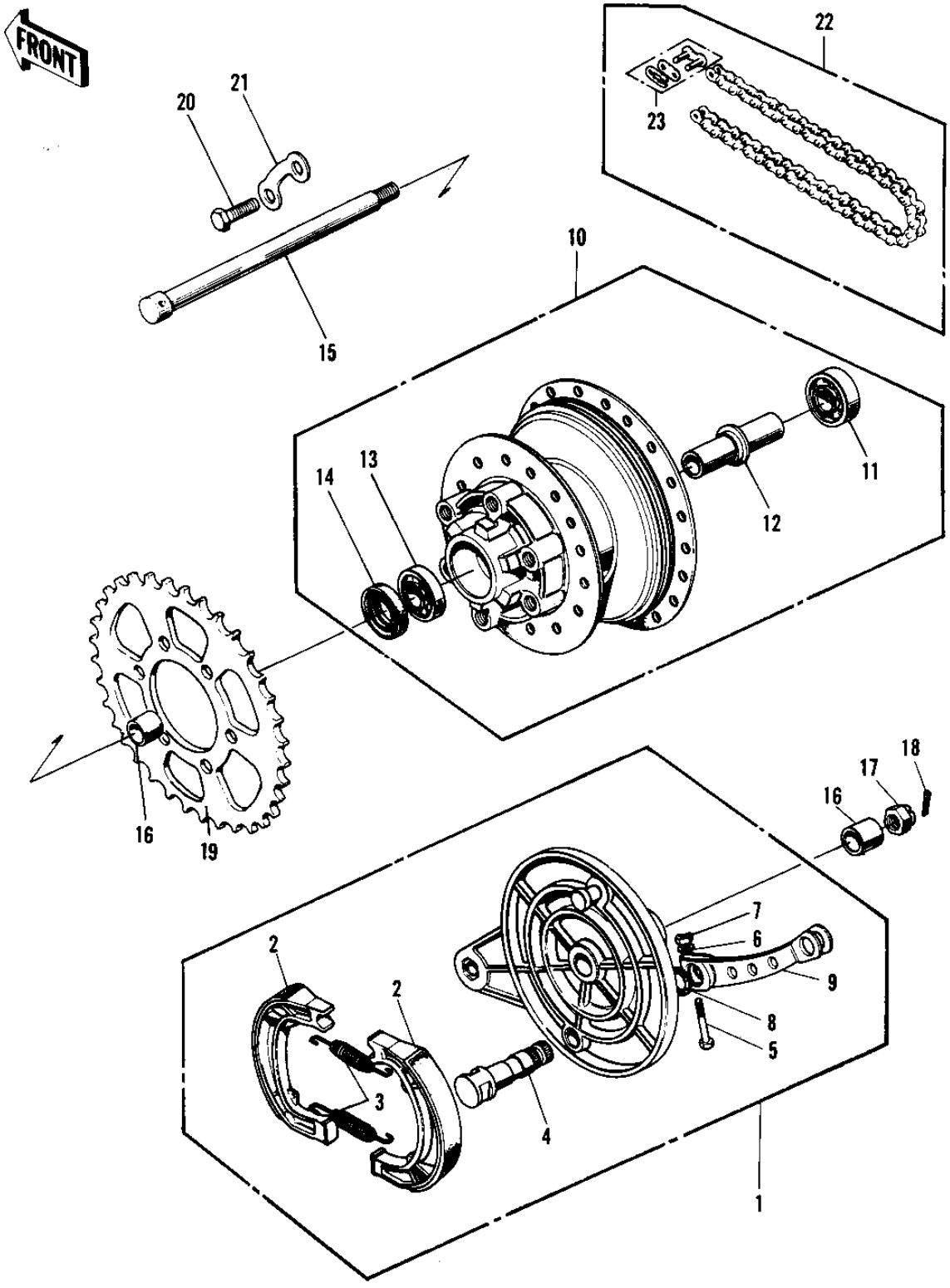

© 2026 Kawasaki Motors Corp., U.S.A.

1972 F6-A

PARTS LIST

REAR HUB/BRAKE/CHAIN

ITEM NAME	PART NUMBER	QUANTITY

© 2026 Kawasaki Motors Corp., U.S.A.