1979 KE125

PARTS DIAGRAM

CHASSIS ELECTRICAL EQUIPMENT ('76-'79)

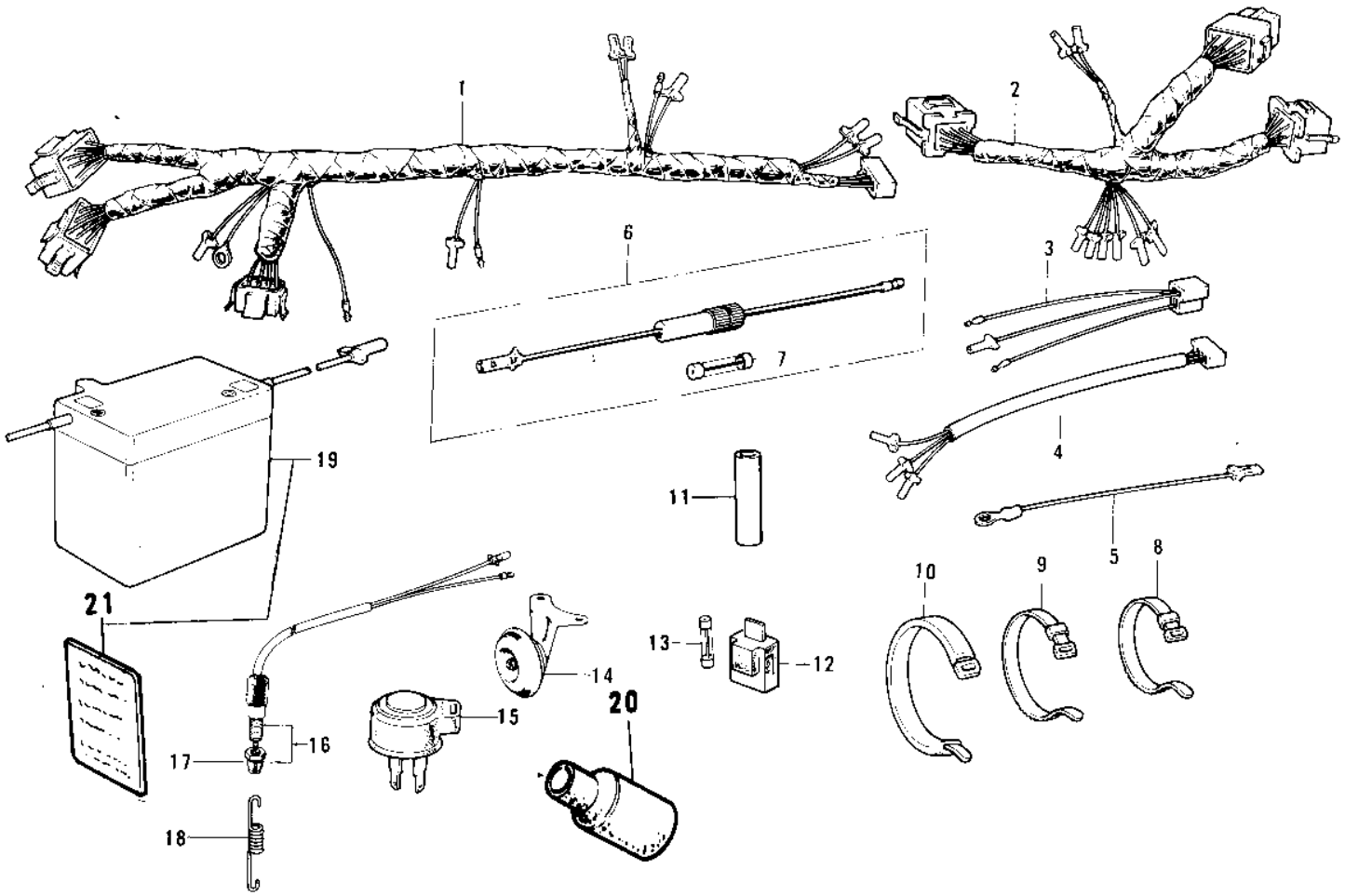

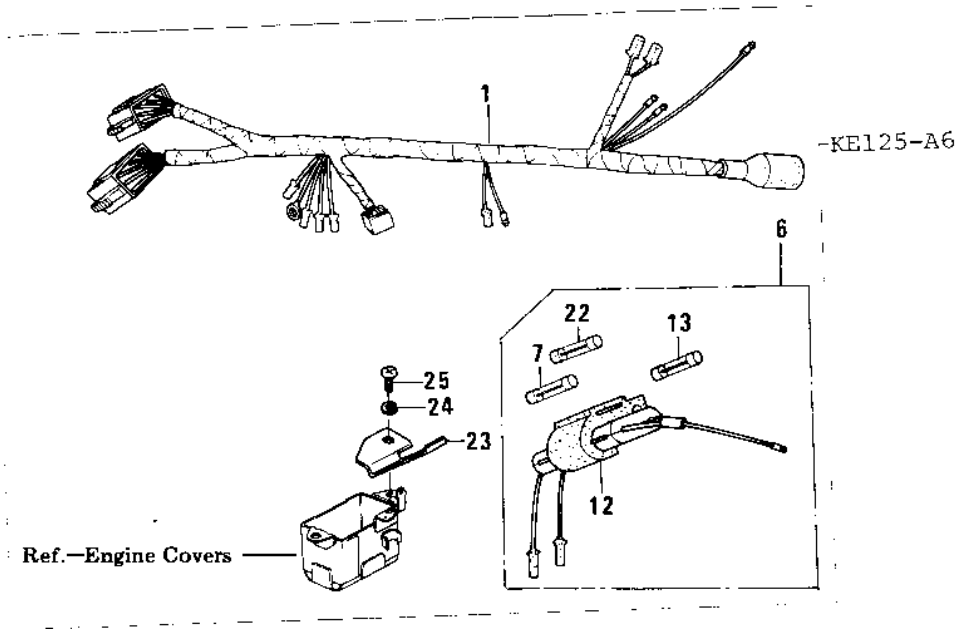

© 2026 Kawasaki Motors Corp., U.S.A.

1979 KE125

PARTS LIST

CHASSIS ELECTRICAL EQUIPMENT ('76-'79)

ITEM NAME	PART NUMBER	QUANTITY

© 2026 Kawasaki Motors Corp., U.S.A.