1978 KD125-A4

PARTS DIAGRAM

KICKSTARTER MECHANISM

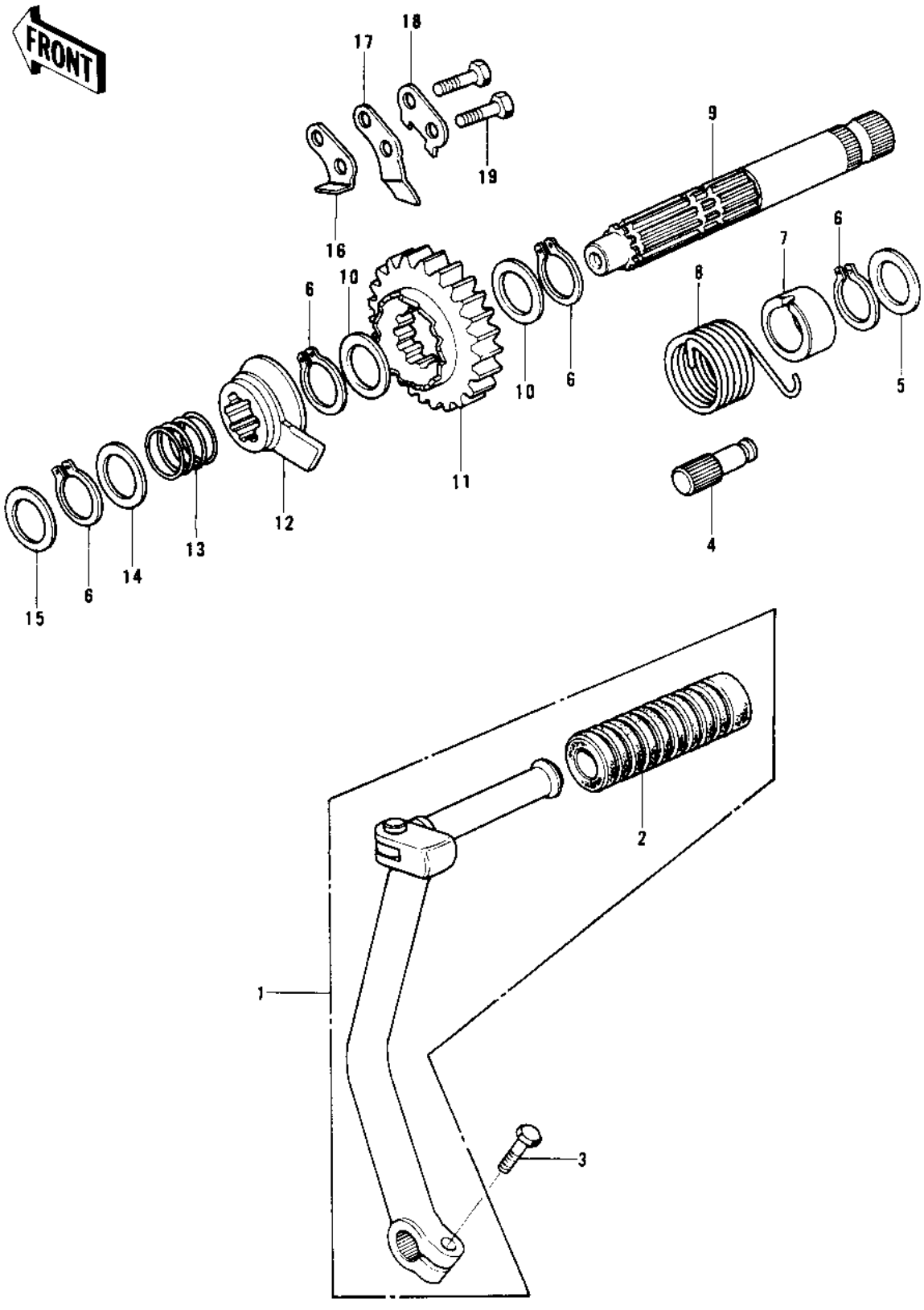

© 2026 Kawasaki Motors Corp., U.S.A.

1978 KD125-A4

PARTS LIST

KICKSTARTER MECHANISM

ITEM NAME	PART NUMBER	QUANTITY
PEDAL,KICKSTARTER (Ref # 1)	13064-019	
RUBBER KICK PEDAL (Ref # 2)	13063-002	
BOLT-SMALL-UPSET 8X25 (Ref # 3)	115G0825	
PIN (Ref # 4)	92043-102	
WASHER,PLAIN (Ref # 5)	92022-268	
CIRCLIP 16MM (Ref # 6)	480J1600	
GUIDE,KICKSPRING (Ref # 7)	13070-008	
SPRING,KICKSTARTER (Ref # 8)	92082-005	
SHAFT,KICKSTARTER (Ref # 9)	13066-1012	
SHAFT,KICKSTARTER (Ref # 9)	13066-1012	
WASHER,PLAIN (Ref # 10)	92022-315	
GEAR,KICKSTARTER (Ref # 11)	13068-032	
RATCHET,KL250-D2 (Ref # 12)	13078-1052	
SPRING,RATCHET (Ref # 13)	92081-122	
WASHER,PLAIN (Ref # 14)	92022-315	
WASHER,PLAIN (Ref # 15)	92022-269	
STOPPER,KICKSTARTER (Ref # 16)	32085-1061	
GUIDE,KICKSTARTER (Ref # 17)	13206-010	
WASHER,LOCK (Ref # 18)	92024-054	
BOLT-UPSET (Ref # 19)	112G0618	

© 2026 Kawasaki Motors Corp., U.S.A.