1976 KE100

PARTS DIAGRAM

CHASSIS ELECTRICAL EQUIPMENT

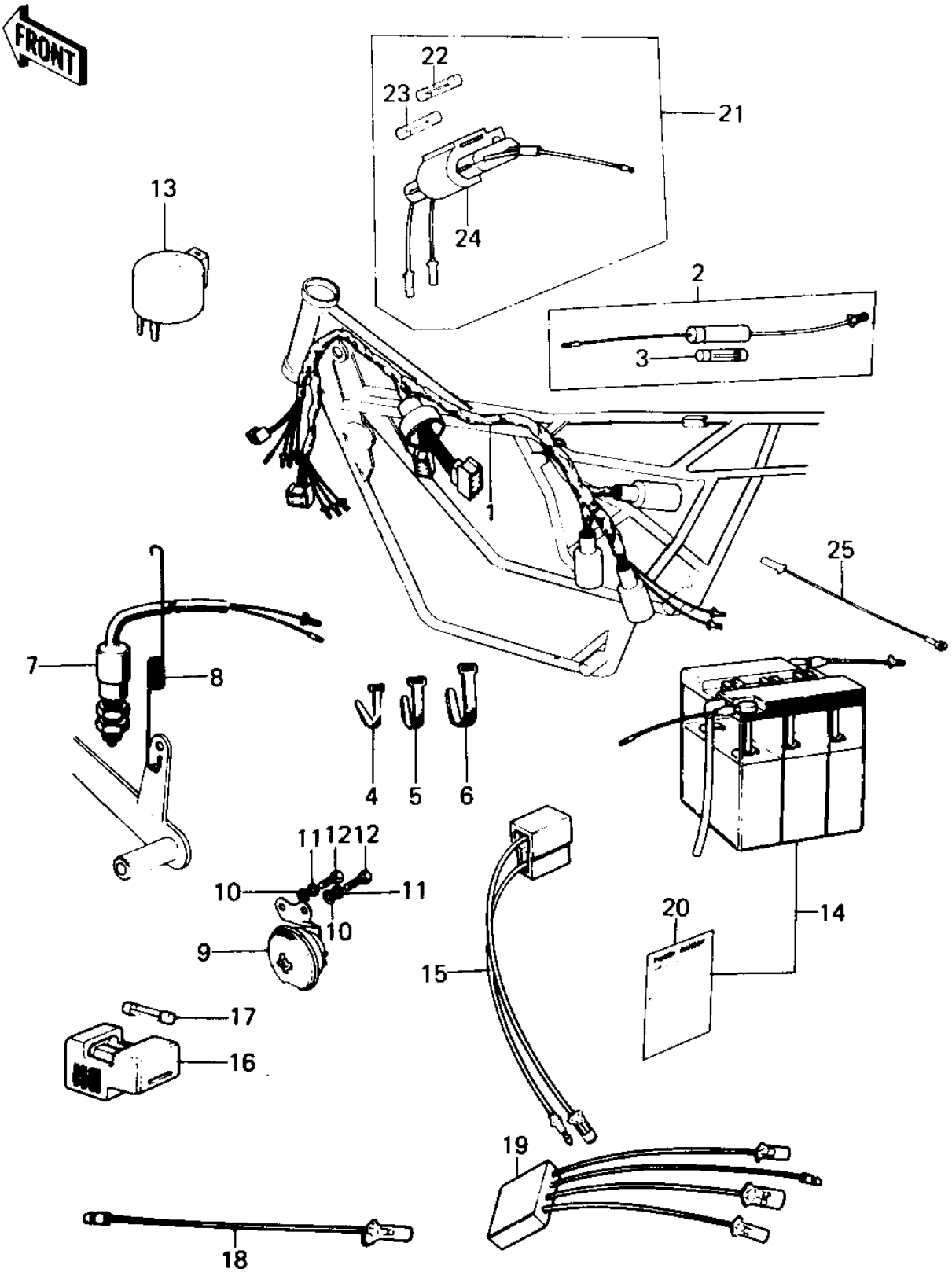

© 2026 Kawasaki Motors Corp., U.S.A.

1976 KE100

PARTS LIST

CHASSIS ELECTRICAL EQUIPMENT

ITEM NAME	PART NUMBER	QUANTITY
WIRING HARNESS-MAIN (Ref # 1)	26001-063	1
WIRING HARNESS,MAIN (Ref # 1)	26001-1046	1
HARNESS (Ref # 1)	26001-1223	1
FUSE ASSY (Ref # 2)	26004-017	1
FUSE 10A (Ref # 3)	26006-003	2
BAND,SHORT (Ref # 4)	92072-030	6
BAND,MIDDLE (Ref # 5)	92072-031	1
BAND,LONG (Ref # 6)	92072-032	4
SWITCH-BRAKE LAMP (Ref # 7)	27010-015	1
SPRING-BRAKE LAMP SW (Ref # 8)	27011-011	1
HORN (Ref # 9)	27003-059	1
WASHER PLAIN 6MM (Ref # 10)	411B0600	2
WASHER SPRING 6MM (Ref # 11)	461F0600	2
BOLT-UPSET,6X12 (Ref # 12)	112G0612	2
RELAY-TURN SIGNAL (Ref # 13)	27002-013	1
YUA BAT 6N4-2A-5 (Ref # 14)	K26012-020	1
YUA BAT 6N6-1D-2 (Ref # 14)	K26012-034	1
WIRE,RECTIFIER LEAD (Ref # 15)	26011-074	1
HOLDER,SPARE FUSE (Ref # 16)	26016-003	1
FUSE 10A (Ref # 17)	26006-003	2
WIRE,LEAD (Ref # 18)	26011-094	1
WIRING HARNESS,REAR (Ref # 19)	26002-056	1
LABEL-WARNING,BATTERY (Ref # 20)	56040-1036	1
FUSE ASSY (Ref # 21)	26004-1010	1
FUSE,10A,L=30M/M (Ref # 22)	26006-1002	1
FUSE,15A,L=30M/M (Ref # 23)	26006-1003	2
DAMPER RUBBER (Ref # 24)	92075-1044	1
WIRE,LEAD (Ref # 25)	26011-093	1

© 2026 Kawasaki Motors Corp., U.S.A.